MILLER STREET PHASE 2 IMPROVEMENTS

IN THE

CITY OF NEW HAVEN, MISSOURI
FRANKLIN COUNTY
FEDERAL PROJECT NO. STP-5401(632)

COCHRAN PROJECT # SC10-224

CONTACT INFORMATION

	OWNER
MISSOURI DEPARTMENT OF TRANSPORTATION	**CITY OF NEW HAVEN**
REPRESENTATIVE: DAVE SHOEMAKE	REPRESENTATIVE: STEVE ROTH, CITY ADMINISTRATOR
ADDRESS: 1590 WOODLAKE DRIVE, CHESTERFIELD, MO 63017-5712	ADDRESS: 101 FRONT STREET, NEW HAVEN, MO 63068
PHONE: (314) 453-1836	PHONE: (636) 237-2349
WATER/SEWER	**CONSULTANT**
CITY OF NEW HAVEN	**COCHRAN**
REPRESENTATIVE: JULIUS GATZEMEYER	REPRESENTATIVE: TARY TODD, P.E.
ADDRESS: 101 FRONT ST., NEW HAVEN, MO 63068	ADDRESS: 12963 MAURER INDUSTRIAL DR. SUNSET HILLS, MO 63127
PHONE: (636) 237-2349	PHONE: (314) 842-4033
ELECTRIC	
AMEREN U.E.	
REPRESENTATIVE: JEFF PROPST	
ADDRESS: 101 MADISON ST., SUITE 100, JEFFERSON CITY, MO 65101	
PHONE: (573) 681-7528	
GAS	
CITY OF NEW HAVEN	
REPRESENTATIVE: CHRIS KEMPER	
ADDRESS: 101 FRONT ST., NEW HAVEN, MO 63068	
PHONE: (636) 237-2616	
TELEPHONE	
FIDELITY COMMUNICATIONS	
REPRESENTATIVE: DAN SMITH, DIRECTOR OF ENGINEERING	
ADDRESS: 52 NORTH CLARK ST, SULLIVAN, MO 63080	
PHONE: (573) 468-1060	

SHEET INDEX

SHEET INDEX	SHEET
QUANTITY SHEET	Q-1
TOPOGRAPHIC SURVEY	TS-1 TO TS-3
SITE PLAN	S-1 TO S-3
ROAD PLAN AND PROFILE	RD-1 TO RD-3
TYPICAL PAVEMENT SECTIONS	XS-1 TO XS-2
CROSS SECTIONS	XS-3 TO XS-9
PAVEMENT MARKING AND SIGNAGE	PM-1 TO PM-3
STORM SEWER PLAN AND PROFILE	ST-1 TO ST-3
UTILITY PLAN	U-1 TO U-3
WATER MAIN PLAN AND PROFILE	W-1 TO W-3
GAS MAIN PLAN AND PROFILE	G-1 TO G-3
DETAILS	DE-1 TO DE-11
EROSION CONTROL	EC-1
TRAFFIC CONTROL	TC-1 TO TC-2

PROJECT INFORMATION

NEW HAVEN, MISSOURI 63068 QUADRANGLE/YEAR: NEW HAVEN/1973	TOWNSHIP: 45N RANGE: 3W SECTION: 36	START OF PROJECT: STA 101+50 END OF PROJECT: STA 115+30 PROJECT LENGTH: 1,380 FEET

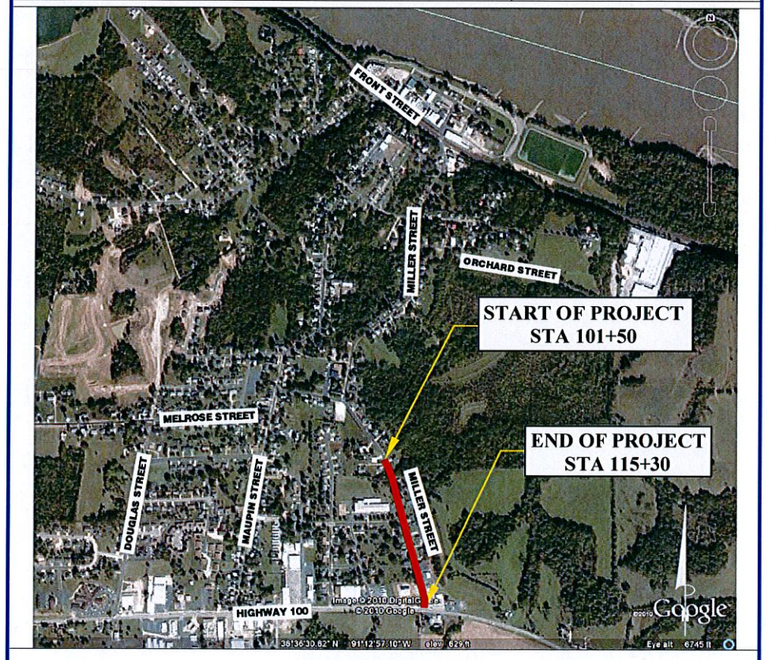

VICINITY MAP
NOT TO SCALE

COCHRAN

- CIVIL ENGINEERING
- LAND SURVEYING
- ARCHITECTURE
- SITE DEVELOPMENT
- MASTER PLANNING
- GENERAL CONSULTING

12963 MAURER INDUSTRIAL DRIVE, SUNSET HILLS, MISSOURI 63127
TELEPHONE (314) 842-4033
FAX (314) 842-5957
www.cochraneng.com

CITY OF NEW HAVEN Est. 1856 On the Missouri River

101 FRONT STREET, NEW HAVEN, MISSOURI 63068
TELEPHONE (573) 237-2349
www.newhavenmo.org

FEBRUARY 2011

Two working days prior to the start of any excavation on this site, contractor shall call 1-800-DIG-RITE for utility location information.

All OSHA rules & regulations established for the type of construction required by these plans shall be strictly followed (ie. Trenching, Blasting, etc.)

STATE OF MISSOURI
TARY TODD
NUMBER
E-24182
REGISTERED PROFESSIONAL ENGINEER

2/24/11
DATE

Tary Todd No. E-24182
Registered Professional Engineer
State of Missouri for Cochran

CITY OF NEW HAVEN, MISSOURI

ACCEPTED BY:

STEVE ROTH
CITY ADMINISTRATOR

QUANTITY SHEET

Bid No.	Description	From STA	To STA	Unit	Quantity
	ROADWAY ITEMS				
1500.1	Mobilization	101+50	115+30	LS	1
1500.2	Channelizers	101+50	115+30	EA	100
2200.1	Removal of Improvements	101+50	115+30	LS	1
2300.1	Subgrade Repair	101+50	115+30	CY	100
2300.2	Rock Excavation	101+50	115+30	CY	100
2300.3	Type 5 Aggregate for Base (4" Thick)			SY	5,224
2350.1	Silt Fence	101+50	115+30	LF	250
2350.2	Inlet Check	101+50	115+30	EA	12
4000.1	Asphalt Pavement (BP-1) (Surface Course) (2") (Echelon Paving)	101+50	115+30	TON	551
4000.2	Asphalt Pavement (Bituminous Base) (Base Course) (3" Lifts)	101+50	115+30	TON	1,653
4000.3	Asphalt Driveway, 5" (BP-1)	110+75	115+30	SF	2,930
5000.2	Concrete Approach (7" Thick)	102+50	115+00	SF	6,118
5000.3	Concrete Curb and Gutter	101+50	115+30	LF	2,722
5000.4	Concrete Vertical Curb	110+50	115+00	LF	225
5000.5	Concrete Pavement (8" Thick)	105+00	111+00	SF	1,000
	UTILITIES ITEMS				
3000.1a	Storm Sewer (15" RCP)	106+69	115+11	LF	204
3000.1b	Storm Sewer (18" RCP)	106+83	115+30	LF	837
3000.3	Storm Sewer Structure (Curb Inlet)	106+69	115+30	EA	10
3000.8	Manhole Frame & Cover (with gasket seal)	101+50	115+30	EA	3
3100.1	Water Service Connections	103+50	114+25	EA	19
3150.1	Water Main (8" Fusible PE, SDR 9)	102+10	115+13	LF	1,351
3150.2	Water Valves (8" Gate)	102+10	115+07	EA	4
3150.3	New Fire Hydrant Assembly	114+75	114+75	EA	1
3150.4	Relocate Fire Hydrant Assembly	102+15	110+60	EA	4
3300.1	Gas Service Connections	102+00	113+00	EA	15
3300.2	Gas Main (2" PE 2406, SDR 11)	102+00	115+04	LF	1,313
3300.4	Gas Valves (2" Shutoff)	102+00	115+04	EA	2
3300.6	Gas Valves (2" Stopple)	115+04	115+04	EA	1
	SIGNING/STRIPING/SIGNALS ITEMS				
1500.3	"Road Work Ahead" Sign (W20-1)	101+50	115+30	EA	2
1500.4	"End Road Work" Sign (G20-2)	101+50	115+30	EA	2
1600.2	Changeable Message Sign (Owner Retained)	101+50	115+30	EA	2
3200.1	"Bike" Sign (W11-1)	102+00	110+70	EA	2
3200.2	"Share the Road" Sign (W16-1)	102+00	110+70	EA	2
3200.3	"Crosswalk" Sign (W11-2)	103+80	105+90	EA	2
3200.4	"Ahead" Sign (W16-9p)	103+80	105+90	EA	2
6000.1	Pavement Marking 4" - White & Yellow	101+50	115+30	LF	5,246
6000.2	Pavement Marking 12" - White	105+00	115+30	LF	322
6000.3	Pavement Marking 24" - White	105+50	115+30	LF	55
6000.4	Pavement Marking 36" x 120" For Midblock Crosswalk - White	104+80	104+90	EA	5
	BICYCLE/PEDESTRIAN FACILITIES ITEMS				
5000.1	Concrete Sidewalk (4" Thick)	101+50	115+30	SF	9,062
5000.6	Detectable Warning Devices	104+80	115+30	SF	115
	LANDSCAPING/STREETSCAPING ITEMS				
9000.1	Sodding	101+50	115+30	SY	1,011

STATE OF MISSOURI
TARY TODD
NUMBER
E-24182
REGISTERED PROFESSIONAL ENGINEER
12/24/11

12963 Maurer Industrial Dr.
Sunset Hills, MO 63127
314-842-4033 (tel.)
314-842-5957 (fax)
david@cochraneng.com
COCHRAN
• Civil Engineering
• Land Surveying
• Architecture
• Site Development
• General Consulting
• Master Planning
CERTIFICATE OF AUTHORITY NUMBER - 006937

Three working days prior to the start of any excavation on this site, contractor shall call 1-800-344-7483 for utility location information.

All OSHA rules & regulations established for the type of construction required by these plans shall be strictly followed (ie. Trenching, Shoring, etc.)

MILLER STREET PHASE 2 IMPROVEMENTS

FEDERAL PROJECT NO. STP-5401(632)

NEW HAVEN, MISSOURI

DATE:	REVISION:	DWN. BY:	APP'D. BY:

QUANTITY SHEET

DWN. BY: M.R.B. APP'D. BY: T.D.T.
DATE: FEBRUARY 2011
SCALE: NO SCALE
PROJ. NO: SC10-224
DWG. NO: *Q-1*

Drawing name: J:\SC10-221\QUANTITY_PH 2.dwg Tab: Q-1 Plotted on: Oct 20, 2011 - 8:37am Plotted by: nclark

TOPOGRAPHIC SURVEY

(THIS DOES NOT CONSTITUTE A BOUNDARY SURVEY)

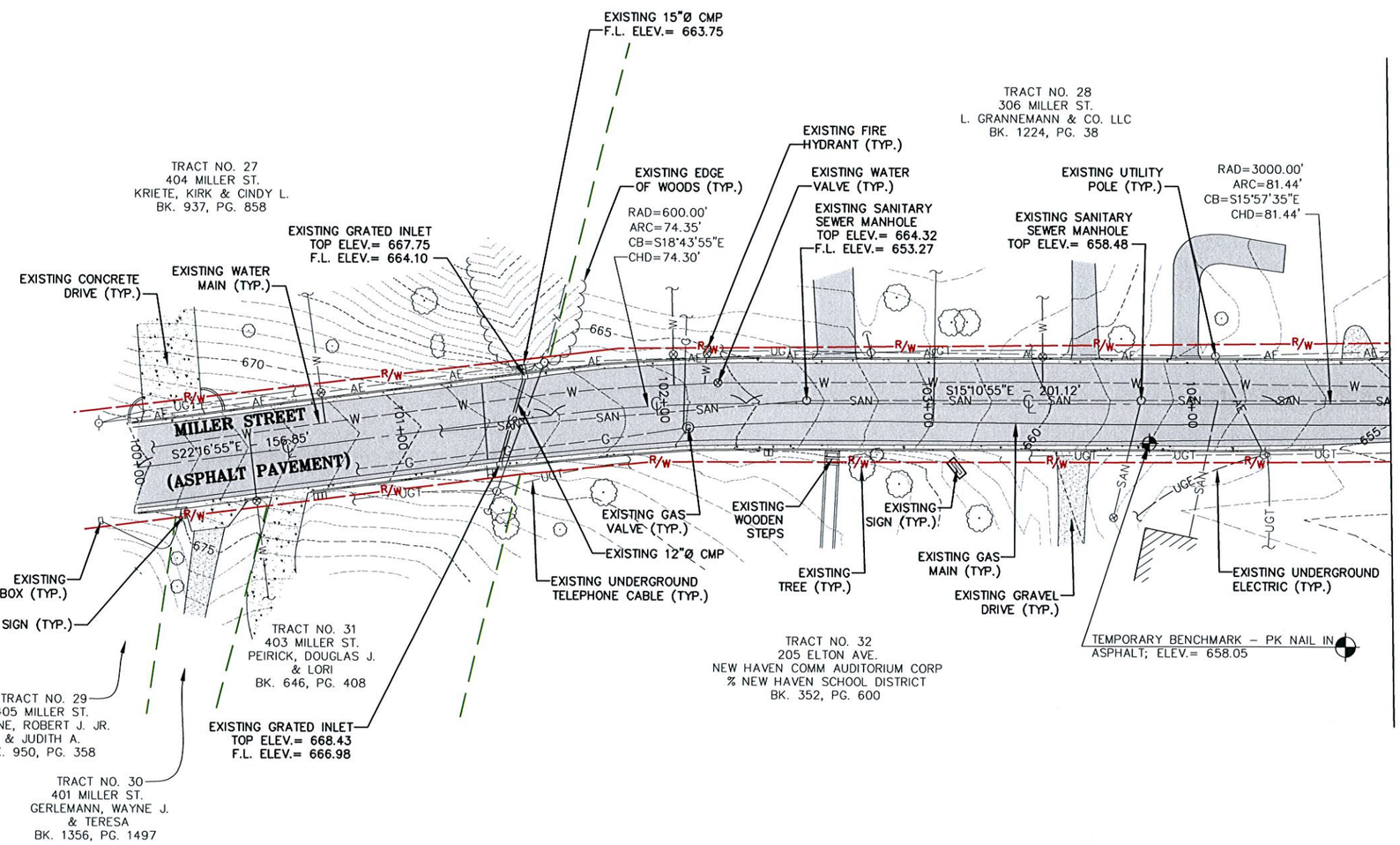

NOTES:

1. UNDERGROUND STRUCTURES, FACILITIES, AND UTILITIES HAVE BEEN PLOTTED FROM AVAILABLE SURVEYS AND RECORDS. THEREFORE, THEIR LOCATIONS MUST BE CONSIDERED APPROXIMATE ONLY. THERE MAY BE OTHERS, THE EXISTENCE OF WHICH IS PRESENTLY NOT KNOWN.
2. TEMPORARY BENCHMARK IS A PK NAIL IN ASPHALT LOCATED ON THE WEST SIDE OF MILLER STREET APPROXIMATELY 250 FEET NORTH OF THE INTERSECTION OF ELTON AVENUE, ELEV.= 658.05. SITE BENCHMARK IS MISSOURI GRS MONUMENT FR-82, ELEV.= 704.72.
3. THE CONTRACTOR IS SPECIFICALLY CAUTIONED THAT THE LOCATION AND/OR ELEVATION OF EXISTING UTILITIES AS SHOWN ON THESE PLANS IS BASED ON RECORDS OF VARIOUS UTILITY COMPANIES AND, WHERE POSSIBLE, MEASUREMENTS TAKEN IN THE FIELD. THE INFORMATION IS NOT TO BE RELIED ON AS BEING EXACT OR COMPLETE. THE CONTRACTOR MUST CALL THE APPROPRIATE UTILITY COMPANY AT LEAST 48 HOURS BEFORE ANY EXCAVATION TO REQUEST EXACT FIELD LOCATION OF UTILITIES. LOCATION, RELOCATION AND CONNECTION OF THE UTILITIES SHALL BE COORDINATED WITH THE UTILITY COMPANIES.
4. TOPOGRAPHIC INFORMATION AS SHOWN HEREON PER FIELD WORK PERFORMED BY T.J.V. & D.P.R. OF COCHRAN, DATED JULY, 2010.
5. THIS DRAWING DOES NOT CONSTITUTE A BOUNDARY SURVEY.
6. THIS PROJECT IS ORIENTED TO GRID NORTH DERIVED FROM GPS OBSERVATIONS OF MISSOURI GRS MONUMENT FR-82 USING MODOT'S RTK GPS NETWORK.
7. THIS SITE LIES WITHIN "ZONE C", AREAS OF MINIMAL FLOODING PER FEMA FLOOD INSURANCE RATE MAP COMMUNITY-PANEL NUMBER 290133 0001A, EFFECTIVE DATE FEBRUARY 18, 1981.

LEGEND

PROPERTY LINE		EXISTING AERIAL ELECTRIC	—AE—	EXISTING GAS VALVE	
EXISTING RIGHT-OF-WAY	—R/W—	EXISTING SANITARY SEWER	—SAN—	EXISTING FIRE HYDRANT	
CENTERLINE OF ROAD	—℄—	EXISTING WATER MAIN	—W—	EXISTING MAILBOX	
EXISTING MAJOR CONTOUR	—970—	EXISTING GAS MAIN	—G—	EXISTING SIGN	
EXISTING MINOR CONTOUR		EXISTING STORM SEWER	—SS—	EXISTING FENCE	—X—
EXISTING BUILDING		EXISTING UNDERGROUND TELEPHONE	—UGT—	EXISTING LIGHT	
		EXISTING FIBER OPTIC	—FO—	EXISTING BUSH	
EXISTING CONCRETE PAVEMENT		EXISTING WATER VALVE		EXISTING TREE	
EXISTING GRAVEL		EXISTING WATER METER	WM	EXISTING TREELINE	
EXISTING ASPHALT PAVEMENT		EXISTING UTILITY POLE		EXISTING UTILITY (TERMINUS UNKNOWN)	
		EXISTING GUY WIRE			

STATE OF MISSOURI
TARY TODD
NUMBER
E-24182
REGISTERED PROFESSIONAL ENGINEER
2/24/11

12963 Maurer Industrial Dr.
Sunset Hills, MO 63127
314-842-4033 (tel.)
314-842-5957 (fax)
david@cochranengineering.com
COCHRAN
• Civil Engineering
• Land Surveying
• Architecture
• Site Development
• General Consulting
• Master Planning
CERTIFICATE OF AUTHORITY NUMBER – 006937

Three working days prior to the start of any excavation on this site, contractor shall call 1-800-344-7483 for utility location information.

All OSHA rules & regulations established for the type of construction required by these plans shall be strictly followed (ie. Trenching, Blasting, etc.)

MILLER STREET PHASE 2 IMPROVEMENTS
FEDERAL PROJECT NO. STP-5401(632)
NEW HAVEN, MISSOURI

REVISION:	DATE:	DWN. BY:	APP'D. BY:

DWN. BY: T.J.V. APP'D. BY: T.D.T.
DATE: FEBRUARY 2011
SCALE: 1" = 50'
PROJ. NO: SC10-224
DWG. NO: TS-1

TOPOGRAPHIC SURVEY

Drawing name: J:\SC10-221\TOPO_PH 2.dwg Tab: TS-1 Plotted on: Feb 24, 2011 - 8:10am Plotted by: mspalding

TOPOGRAPHIC SURVEY

(THIS DOES NOT CONSTITUTE A BOUNDARY SURVEY)

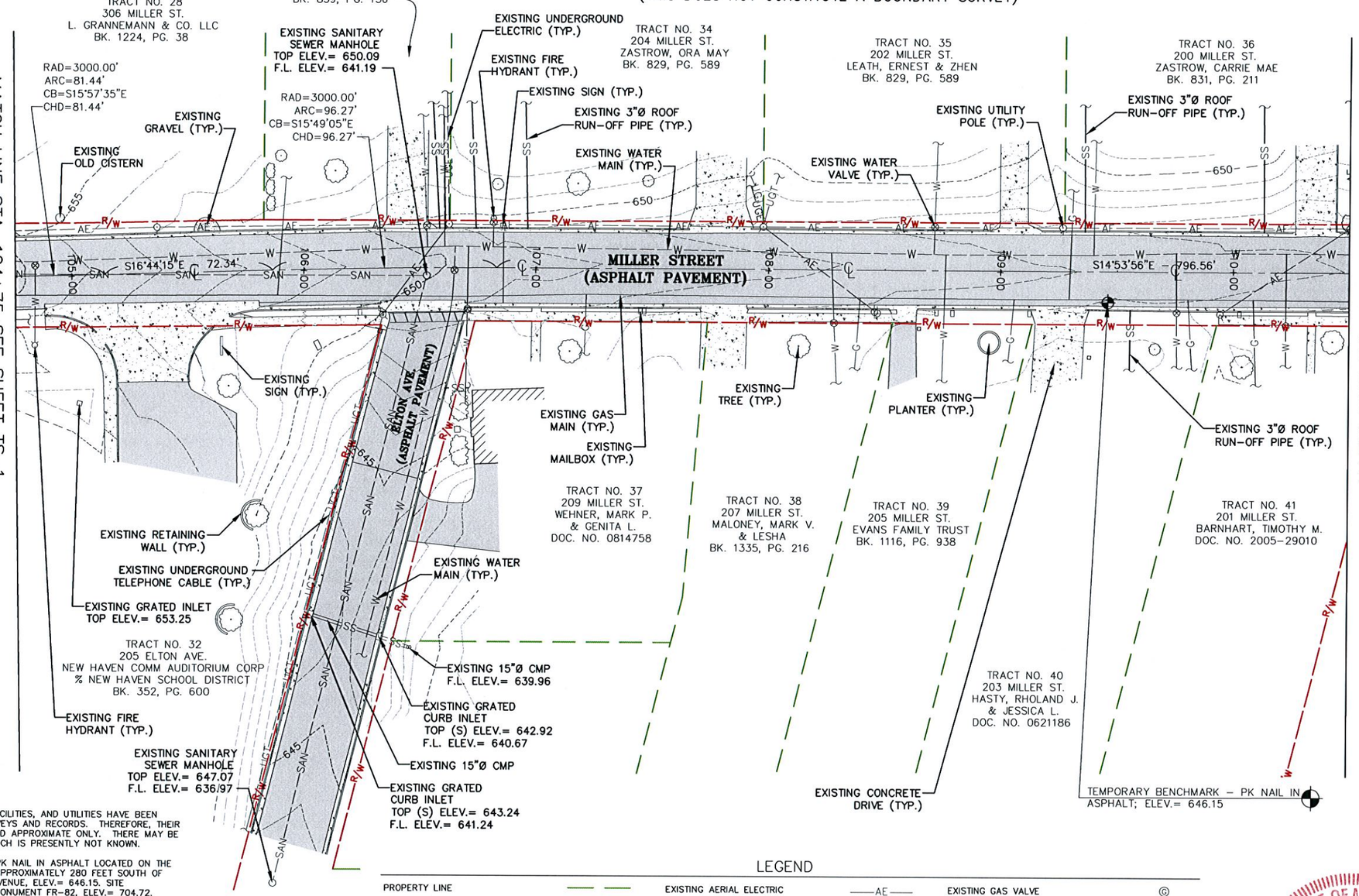

NOTES:

1. UNDERGROUND STRUCTURES, FACILITIES, AND UTILITIES HAVE BEEN PLOTTED FROM AVAILABLE SURVEYS AND RECORDS. THEREFORE, THEIR LOCATIONS MUST BE CONSIDERED APPROXIMATE ONLY. THERE MAY BE OTHERS, THE EXISTENCE OF WHICH IS PRESENTLY NOT KNOWN.
2. TEMPORARY BENCHMARK IS A PK NAIL IN ASPHALT LOCATED ON THE WEST SIDE OF MILLER STREET APPROXIMATELY 280 FEET SOUTH OF THE INTERSECTION OF ELTON AVENUE, ELEV.= 646.15. SITE BENCHMARK IS MISSOURI GRS MONUMENT FR-82, ELEV.= 704.72.
3. THE CONTRACTOR IS SPECIFICALLY CAUTIONED THAT THE LOCATION AND/OR ELEVATION OF EXISTING UTILITIES AS SHOWN ON THESE PLANS IS BASED ON RECORDS OF VARIOUS UTILITY COMPANIES AND, WHERE POSSIBLE, MEASUREMENTS TAKEN IN THE FIELD. THE INFORMATION IS NOT TO BE RELIED ON AS BEING EXACT OR COMPLETE. THE CONTRACTOR MUST CALL THE APPROPRIATE UTILITY COMPANY AT LEAST 48 HOURS BEFORE ANY EXCAVATION TO REQUEST EXACT FIELD LOCATION OF UTILITIES. LOCATION, RELOCATION AND CONNECTION OF THE UTILITIES SHALL BE COORDINATED WITH THE UTILITY COMPANIES.
4. TOPOGRAPHIC INFORMATION AS SHOWN HEREON PER FIELD WORK PERFORMED BY T.J.V. & D.P.R. OF COCHRAN, DATED JULY, 2010.
5. THIS DRAWING DOES NOT CONSTITUTE A BOUNDARY SURVEY.
6. THIS PROJECT IS ORIENTED TO GRID NORTH DERIVED FROM GPS OBSERVATIONS OF MISSOURI GRS MONUMENT FR-82 USING MODOT'S RTK GPS NETWORK.
7. THIS SITE LIES WITHIN "ZONE C", AREAS OF MINIMAL FLOODING PER FEMA FLOOD INSURANCE RATE MAP COMMUNITY-PANEL NUMBER 290133 0001A, EFFECTIVE DATE FEBRUARY 18, 1981.

LEGEND

PROPERTY LINE		EXISTING AERIAL ELECTRIC	—AE—	EXISTING GAS VALVE	
EXISTING RIGHT-OF-WAY	—R/W—	EXISTING SANITARY SEWER	—SAN—	EXISTING FIRE HYDRANT	
CENTERLINE OF ROAD	—℄—	EXISTING WATER MAIN	—W—	EXISTING MAILBOX	
EXISTING MAJOR CONTOUR	—970—	EXISTING GAS MAIN	—G—	EXISTING SIGN	
EXISTING MINOR CONTOUR		EXISTING STORM SEWER	—SS—	EXISTING FENCE	—X—
EXISTING BUILDING		EXISTING UNDERGROUND TELEPHONE	—UGT—	EXISTING LIGHT	
		EXISTING FIBER OPTIC	—FO—	EXISTING BUSH	
EXISTING CONCRETE PAVEMENT		EXISTING WATER VALVE		EXISTING TREE	
EXISTING GRAVEL		EXISTING WATER METER	WM	EXISTING TREELINE	
EXISTING ASPHALT PAVEMENT		EXISTING UTILITY POLE		EXISTING UTILITY (TERMINUS UNKNOWN)	
		EXISTING GUY WIRE			

STATE OF MISSOURI
TARY TODD
NUMBER
E-24182
REGISTERED PROFESSIONAL ENGINEER
2/24/11

COCHRAN
12963 Maurer Industrial Dr.
Sunset Hills, MO 63127
314-842-4033 (tel.)
314-842-5957 (fax)
davidc@cochranengineering.com
• Civil Engineering
• Land Surveying
• Architecture
• Site Development
• General Consulting
• Master Planning
CERTIFICATE OF AUTHORITY NUMBER – 006937

Three working days prior to the start of any excavation on this site, contractor shall call 1-800-344-7483 for utility location information.

All OSHA rules & regulations established for the type of construction required by these plans shall be strictly followed (ie. Trenching, Blasting, etc.)

MILLER STREET PHASE 2 IMPROVEMENTS
FEDERAL PROJECT NO. STP-5401(632)
NEW HAVEN, MISSOURI

DATE:	REVISION:	DWN. BY: / APP'D. BY:

TOPOGRAPHIC SURVEY

DWN. BY: T.J.V.	APP'D. BY: T.D.T.
DATE: FEBRUARY 2011	
SCALE: 1" = 50'	
PROJ. NO: SC10-224	
DWG. NO: TS-2	

Drawing name: J:\SC10-221\TOPO_PH 2.dwg Tab: TS-2 Plotted on: Feb 24, 2011 – 8:10am Plotted by: mspalding

TOPOGRAPHIC SURVEY

(THIS DOES NOT CONSTITUTE A BOUNDARY SURVEY)

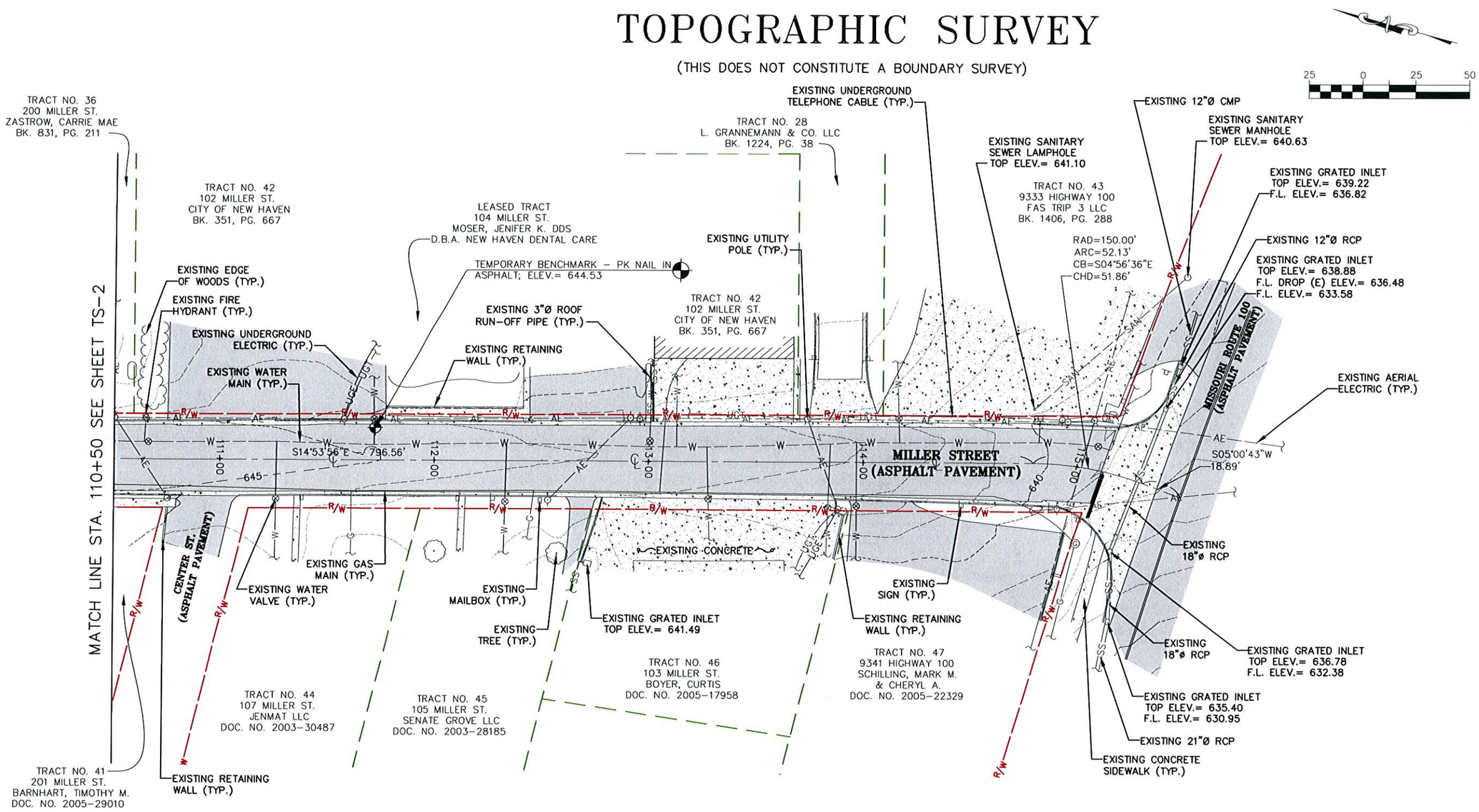

NOTES:

1. UNDERGROUND STRUCTURES, FACILITIES, AND UTILITIES HAVE BEEN PLOTTED FROM AVAILABLE SURVEYS AND RECORDS. THEREFORE, THEIR LOCATIONS MUST BE CONSIDERED APPROXIMATE ONLY. THERE MAY BE OTHERS, THE EXISTENCE OF WHICH IS PRESENTLY NOT KNOWN.
2. TEMPORARY BENCHMARK IS A PK NAIL IN ASPHALT LOCATED ON THE EAST SIDE OF MILLER STREET APPROXIMATELY 365 FEET NORTH OF THE INTERSECTION OF HIGHWAY 100, ELEV.= 644.53. SITE BENCHMARK IS MISSOURI GRS MONUMENT FR-82, ELEV.= 704.72.
3. THE CONTRACTOR IS SPECIFICALLY CAUTIONED THAT THE LOCATION AND/OR ELEVATION OF EXISTING UTILITIES AS SHOWN ON THESE PLANS IS BASED ON RECORDS OF VARIOUS UTILITY COMPANIES AND, WHERE POSSIBLE, MEASUREMENTS TAKEN IN THE FIELD. THE INFORMATION IS NOT TO BE RELIED ON AS BEING EXACT OR COMPLETE. THE CONTRACTOR MUST CALL THE APPROPRIATE UTILITY COMPANY AT LEAST 48 HOURS BEFORE ANY EXCAVATION TO REQUEST EXACT FIELD LOCATION OF UTILITIES. LOCATION, RELOCATION AND CONNECTION OF THE UTILITIES SHALL BE COORDINATED WITH THE UTILITY COMPANIES.
4. TOPOGRAPHIC INFORMATION AS SHOWN HEREON PER FIELD WORK PERFORMED BY T.J.V. & D.P.R. OF COCHRAN, DATED JULY, 2010.
5. THIS DRAWING DOES NOT CONSTITUTE A BOUNDARY SURVEY.
6. THIS PROJECT IS ORIENTED TO GRID NORTH DERIVED FROM GPS OBSERVATIONS OF MISSOURI GRS MONUMENT FR-82 USING MODOT'S RTK GPS NETWORK.
7. THIS SITE LIES WITHIN "ZONE C", AREAS OF MINIMAL FLOODING PER FEMA FLOOD INSURANCE RATE MAP COMMUNITY-PANEL NUMBER 290133 0001A, EFFECTIVE DATE FEBRUARY 18, 1981.

LEGEND

PROPERTY LINE		EXISTING AERIAL ELECTRIC	—AE—	EXISTING GAS VALVE	
EXISTING RIGHT-OF-WAY	—R/W—	EXISTING SANITARY SEWER	—SAN—	EXISTING FIRE HYDRANT	
CENTERLINE OF ROAD	—℄—	EXISTING WATER MAIN	—W—	EXISTING MAILBOX	
EXISTING MAJOR CONTOUR	—970—	EXISTING GAS MAIN	—G—	EXISTING SIGN	
EXISTING MINOR CONTOUR		EXISTING STORM SEWER	—SS—	EXISTING FENCE	—X—
EXISTING BUILDING		EXISTING UNDERGROUND TELEPHONE	—UGT—	EXISTING LIGHT	
		EXISTING FIBER OPTIC	—FO—	EXISTING BUSH	
EXISTING CONCRETE PAVEMENT		EXISTING WATER VALVE		EXISTING TREE	
EXISTING GRAVEL		EXISTING WATER METER	WM	EXISTING TREELINE	
EXISTING ASPHALT PAVEMENT		EXISTING UTILITY POLE		EXISTING UTILITY (TERMINUS UNKNOWN)	
		EXISTING GUY WIRE			

STATE OF MISSOURI
TARY TODD
NUMBER E-24162
REGISTERED PROFESSIONAL ENGINEER

2/24/11

12963 Maurer Industrial Dr. 314-842-4033 (tel.)
Sunset Hills, MO 63127 314-842-5957 (fax)
david@cochranengineering.com
COCHRAN
• Civil Engineering
• Land Surveying
• Architecture
• Site Development
• General Consulting
• Master Planning
CERTIFICATE OF AUTHORITY NUMBER - 006937

Three working days prior to the start of any excavation on the site, contractor shall call 1-800-344-7483 for utility location information.

All OSHA rules & regulations established for the type of construction required by these plans shall be strictly followed (i.e. trenching, blasting, etc.)

MILLER STREET PHASE 2 IMPROVEMENTS
FEDERAL PROJECT NO. STP-5401(632)
NEW HAVEN, MISSOURI

DATE:	REVISION:	DWN. BY:	APP'D. BY:

TOPOGRAPHIC SURVEY

DWN. BY: T.J.V. APP'D. BY: T.D.T.
DATE: FEBRUARY 2011
SCALE: 1" = 50'
PROJ. NO: SC10-224
DWG. NO: TS-3

Drawing name: J:\SC10-221\TOPO_PH 2.dwg Tab: TS-3 Plotted on: Feb 24, 2011 - 8:10am Plotted by: mspalding

SITE PLAN

** CONTRACTOR SHALL RELOCATE ALL EXISTING SIGNS, PLANTERS, MAILBOXES, RUN-OFF PIPES AND PRIVATE LIGHTS AS NECESSARY FOR THE CONSTRUCTION OF THE IMPROVEMENTS. NEW LOCATIONS SHALL BE AS DIRECTED BY THE ENGINEER. SEE THE REMOVAL OF IMPROVEMENTS SECTION IN THE SPECIFICATIONS. **

** CONTRACTOR SHALL ADJUST TO GRADE ALL UTILITIES NECESSARY TO BRING THE UTILITY TO THE GRADE OF THE NEW PAVEMENT. SEE THE UTILITY ADJUSTMENT SECTION OF THE SPECIFICATIONS. **

** CONTRACTOR SHALL REMOVE AND REPLACE ALL EXISTING PRIVATE SIDEWALKS AS NECESSARY FOR THE CONSTRUCTION OF THE IMPROVEMENTS. PRIVATE SIDEWALKS SHALL BE SAWCUT AT THE RIGHT-OF-WAY OR NEAREST JOINT AS DIRECTED BY THE ENGINEER. SEE THE REMOVAL OF IMPROVEMENTS SECTION IN THE SPECIFICATIONS. **

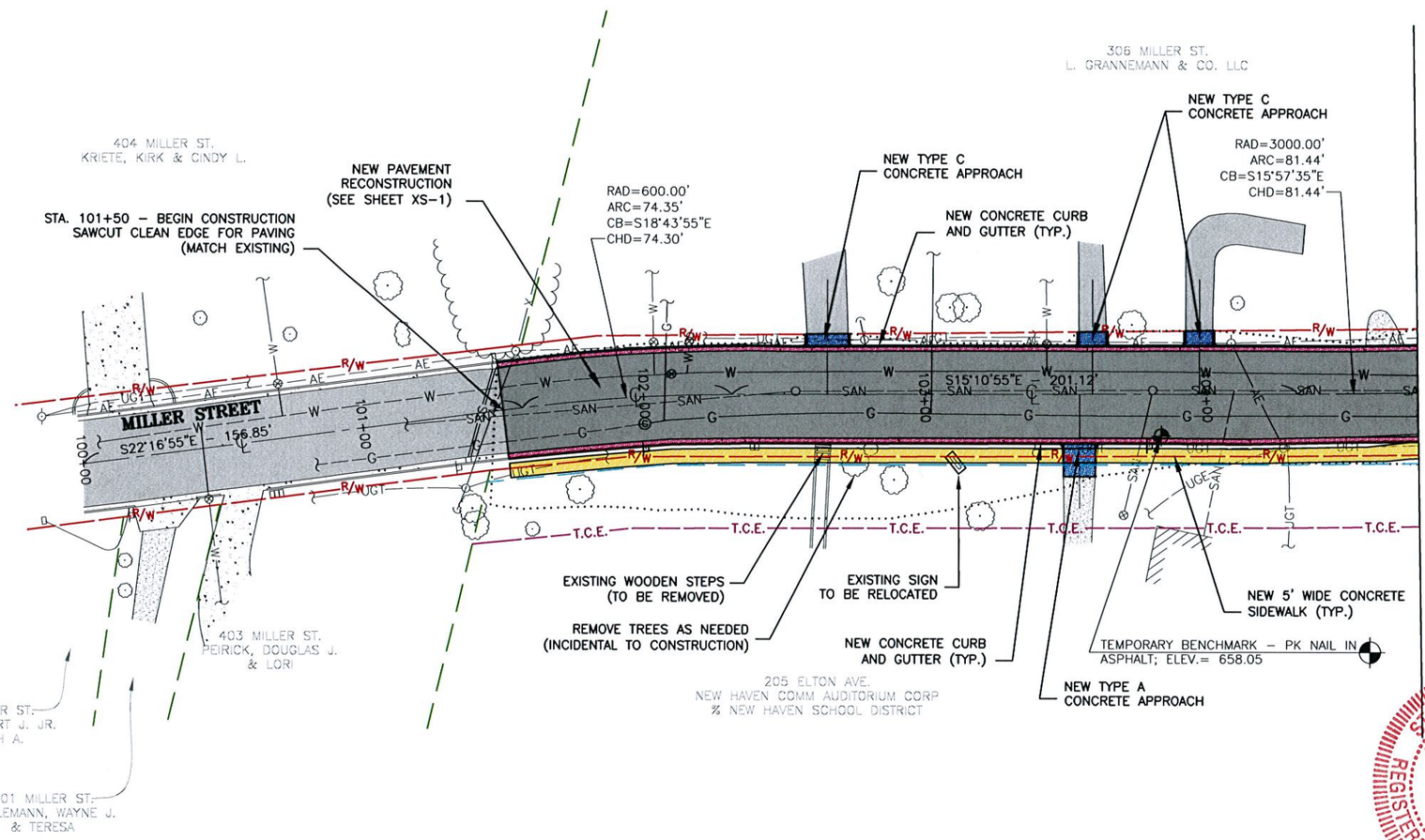

NOTES:

1. UNDERGROUND STRUCTURES, FACILITIES, AND UTILITIES HAVE BEEN PLOTTED FROM AVAILABLE SURVEYS AND RECORDS. THEREFORE, THEIR LOCATIONS MUST BE CONSIDERED APPROXIMATE ONLY. THERE MAY BE OTHERS, THE EXISTENCE OF WHICH IS PRESENTLY NOT KNOWN.
2. TEMPORARY BENCHMARK IS A PK NAIL IN ASPHALT LOCATED ON THE WEST SIDE OF MILLER STREET APPROXIMATELY 250 FEET NORTH OF THE INTERSECTION OF ELTON AVENUE, ELEV.= 658.05. SITE BENCHMARK IS MISSOURI GRS MONUMENT FR-82, ELEV.= 704.72.
3. THE CONTRACTOR IS SPECIFICALLY CAUTIONED THAT THE LOCATION AND/OR ELEVATION OF EXISTING UTILITIES AS SHOWN ON THESE PLANS IS BASED ON RECORDS OF VARIOUS UTILITY COMPANIES AND, WHERE POSSIBLE, MEASUREMENTS TAKEN IN THE FIELD. THE INFORMATION IS NOT TO BE RELIED ON AS BEING EXACT OR COMPLETE. THE CONTRACTOR MUST CALL THE APPROPRIATE UTILITY COMPANY AT LEAST 48 HOURS BEFORE ANY EXCAVATION TO REQUEST EXACT FIELD LOCATION OF UTILITIES. LOCATION, RELOCATION AND CONNECTION OF THE UTILITIES SHALL BE COORDINATED WITH THE UTILITY COMPANIES.
4. TOPOGRAPHIC INFORMATION AS SHOWN HEREON PER FIELD WORK PERFORMED BY T.J.V. & D.P.R. OF COCHRAN, DATED JULY, 2010.
5. THIS DRAWING DOES NOT CONSTITUTE A BOUNDARY SURVEY.
6. THIS PROJECT IS ORIENTED TO GRID NORTH DERIVED FROM GPS OBSERVATIONS OF MISSOURI GRS MONUMENT FR-82 USING MODOT'S RTK GPS NETWORK.
7. THIS SITE LIES WITHIN "ZONE C", AREAS OF MINIMAL FLOODING PER FEMA FLOOD INSURANCE RATE MAP COMMUNITY-PANEL NUMBER 290133 0001A, EFFECTIVE DATE FEBRUARY 18, 1981.

LEGEND

PROPERTY LINE		EXISTING AERIAL ELECTRIC	AE	EXISTING GAS VALVE		NEW ASPHALT PAVEMENT	
EXISTING RIGHT-OF-WAY	R/W	EXISTING SANITARY SEWER	SAN	EXISTING FIRE HYDRANT		NEW CONCRETE PAVEMENT	
CENTERLINE OF ROAD	℄	EXISTING WATER MAIN	W	EXISTING MAILBOX		NEW CONCRETE APPROACH	
EXISTING MAJOR CONTOUR	970	EXISTING GAS MAIN	G	EXISTING SIGN		NEW SIDEWALK	
EXISTING MINOR CONTOUR		EXISTING STORM SEWER	SS	EXISTING FENCE	X	NEW CURB RAMP	
EXISTING BUILDING		EXISTING UNDERGROUND TELEPHONE	UGT	EXISTING LIGHT		NEW CURB AND GUTTER	
		EXISTING FIBER OPTIC	FO	EXISTING BUSH		NEW STORM SEWER	SS
EXISTING CONCRETE PAVEMENT		EXISTING WATER VALVE		EXISTING TREE		NEW CURB INLET	
EXISTING GRAVEL		EXISTING WATER METER	WM	EXISTING TREELINE		NEW WATER MAIN	W
EXISTING ASPHALT PAVEMENT		EXISTING UTILITY POLE		EXISTING UTILITY (TERMINUS UNKNOWN)		NEW GATE VALVE	
		EXISTING GUY WIRE				NEW FIRE HYDRANT	
						NEW GAS MAIN	G
						NEW GAS VALVE	
						TEMPORARY CONSTRUCTION EASEMENT	T.C.E.
						PERMANENT EASEMENT	

STATE OF MISSOURI
TARY TODD
NUMBER
E-24152
REGISTERED PROFESSIONAL ENGINEER
2/24/11

COCHRAN
12863 Maurer Industrial Dr. 314-842-4033 (tel.)
Sunset Hills, MO 63127 314-842-5957 (fax)
david@cochranengineering.com
• Civil Engineering
• Land Surveying
• Architecture
• Site Development
• General Consulting
• Master Planning
CERTIFICATE OF AUTHORITY NUMBER – 006937

Three working days prior to the start of any excavation on this site, contractor shall call 1-800-DIG-RITE for utility location information.

All OSHA rules & regulations established for the level of construction required by these plans shall be strictly followed (ie. Trenching, Blasting, etc.)

MILLER STREET PHASE 2 IMPROVEMENTS
FEDERAL PROJECT NO. STP-5401(632)
NEW HAVEN, MISSOURI

DATE:	REVISION:	DWN. BY:	APPD. BY:

DWN. BY: M.R.B. APPD. BY: T.D.T.
DATE: FEBRUARY 2011
SCALE: 1" = 50'
PROJ. NO: SC10-224
DWG. NO: S-1
SITE PLAN

Drawing name: J:\SC10-221\SITE_PH2.dwg Tab: S-1 Plotted on: Oct 18, 2011 – 8:33am Plotted by: nclark

SITE PLAN

** CONTRACTOR SHALL RELOCATE ALL EXISTING SIGNS, PLANTERS, MAILBOXES, RUN-OFF PIPES AND PRIVATE LIGHTS AS NECESSARY FOR THE CONSTRUCTION OF THE IMPROVEMENTS. NEW LOCATIONS SHALL BE AS DIRECTED BY THE ENGINEER. SEE THE REMOVAL OF IMPROVEMENTS SECTION IN THE SPECIFICATIONS. **

** CONTRACTOR SHALL ADJUST TO GRADE ALL UTILITIES NECESSARY TO BRING THE UTILITY TO THE GRADE OF THE NEW PAVEMENT. SEE THE UTILITY ADJUSTMENT SECTION OF THE SPECIFICATIONS. **

** CONTRACTOR SHALL REMOVE AND REPLACE ALL EXISTING PRIVATE SIDEWALKS AS NECESSARY FOR THE CONSTRUCTION OF THE IMPROVEMENTS. PRIVATE SIDEWALKS SHALL BE SAWCUT AT THE RIGHT-OF-WAY OR NEAREST JOINT AS DIRECTED BY THE ENGINEER. SEE THE REMOVAL OF IMPROVEMENTS SECTION IN THE SPECIFICATIONS. **

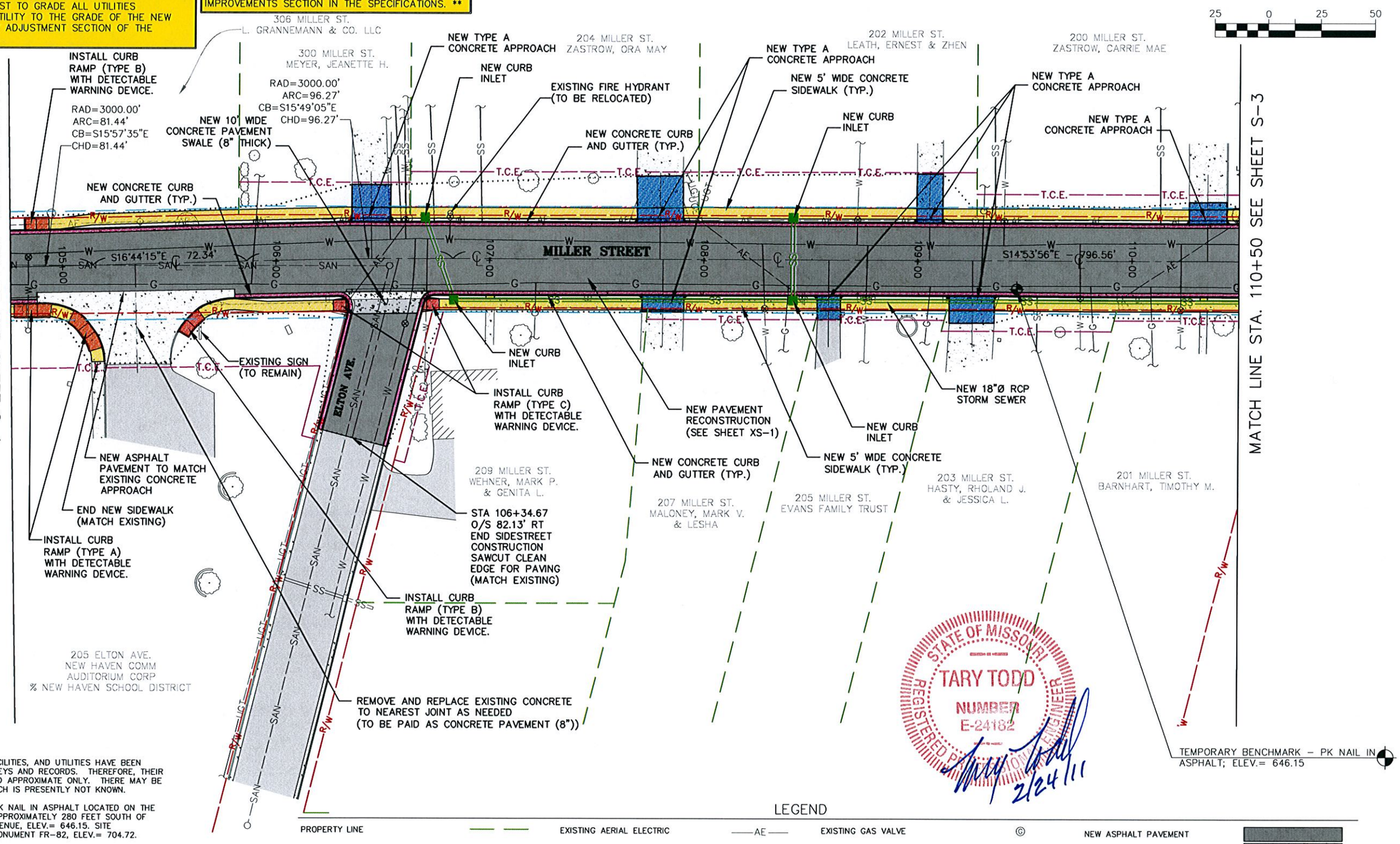

NOTES:

1. UNDERGROUND STRUCTURES, FACILITIES, AND UTILITIES HAVE BEEN PLOTTED FROM AVAILABLE SURVEYS AND RECORDS. THEREFORE, THEIR LOCATIONS MUST BE CONSIDERED APPROXIMATE ONLY. THERE MAY BE OTHERS, THE EXISTENCE OF WHICH IS PRESENTLY NOT KNOWN.
2. TEMPORARY BENCHMARK IS A PK NAIL IN ASPHALT LOCATED ON THE WEST SIDE OF MILLER STREET APPROXIMATELY 280 FEET SOUTH OF THE INTERSECTION OF ELTON AVENUE, ELEV.= 646.15. SITE BENCHMARK IS MISSOURI GRS MONUMENT FR-82, ELEV.= 704.72.
3. THE CONTRACTOR IS SPECIFICALLY CAUTIONED THAT THE LOCATION AND/OR ELEVATION OF EXISTING UTILITIES AS SHOWN ON THESE PLANS IS BASED ON RECORDS OF VARIOUS UTILITY COMPANIES AND, WHERE POSSIBLE, MEASUREMENTS TAKEN IN THE FIELD. THE INFORMATION IS NOT TO BE RELIED ON AS BEING EXACT OR COMPLETE. THE CONTRACTOR MUST CALL THE APPROPRIATE UTILITY COMPANY AT LEAST 48 HOURS BEFORE ANY EXCAVATION TO REQUEST EXACT FIELD LOCATION OF UTILITIES. LOCATION, RELOCATION AND CONNECTION OF THE UTILITIES SHALL BE COORDINATED WITH THE UTILITY COMPANIES.
4. TOPOGRAPHIC INFORMATION AS SHOWN HEREON PER FIELD WORK PERFORMED BY T.J.V. & D.P.R. OF COCHRAN, DATED JULY, 2010.
5. THIS DRAWING DOES NOT CONSTITUTE A BOUNDARY SURVEY.
6. THIS PROJECT IS ORIENTED TO GRID NORTH DERIVED FROM GPS OBSERVATIONS OF MISSOURI GRS MONUMENT FR-82 USING MODOT'S RTK GPS NETWORK.
7. THIS SITE LIES WITHIN "ZONE C", AREAS OF MINIMAL FLOODING PER FEMA FLOOD INSURANCE RATE MAP COMMUNITY-PANEL NUMBER 290133 0001A, EFFECTIVE DATE FEBRUARY 18, 1981.

STATE OF MISSOURI
TARY TODD
NUMBER
E-24182
REGISTERED PROFESSIONAL ENGINEER
2/24/11

LEGEND

PROPERTY LINE		EXISTING AERIAL ELECTRIC	—AE—	EXISTING GAS VALVE		NEW ASPHALT PAVEMENT	
EXISTING RIGHT-OF-WAY	—R/W—	EXISTING SANITARY SEWER	—SAN—	EXISTING FIRE HYDRANT		NEW CONCRETE PAVEMENT	
CENTERLINE OF ROAD	—℄—	EXISTING WATER MAIN	—W—	EXISTING MAILBOX		NEW CONCRETE APPROACH	
EXISTING MAJOR CONTOUR	—970—	EXISTING GAS MAIN	—G—	EXISTING SIGN		NEW SIDEWALK	
EXISTING MINOR CONTOUR		EXISTING STORM SEWER	═SS═	EXISTING FENCE	—X—	NEW CURB RAMP	
EXISTING BUILDING		EXISTING UNDERGROUND TELEPHONE	—UGT—	EXISTING LIGHT		NEW CURB AND GUTTER	
		EXISTING FIBER OPTIC	—FO—	EXISTING BUSH		NEW STORM SEWER	═SS═
EXISTING CONCRETE PAVEMENT		EXISTING WATER VALVE		EXISTING TREE		NEW CURB INLET	
EXISTING GRAVEL		EXISTING WATER METER	WM	EXISTING TREELINE		NEW WATER MAIN	—W—
EXISTING ASPHALT PAVEMENT		EXISTING UTILITY POLE		EXISTING UTILITY (TERMINUS UNKNOWN)		NEW GATE VALVE	
		EXISTING GUY WIRE				NEW FIRE HYDRANT	
						NEW GAS MAIN	—G—
						NEW GAS VALVE	
						TEMPORARY CONSTRUCTION EASEMENT	—T.C.E.—
						PERMANENT EASEMENT	

12963 Maurer Industrial Dr.
Sunset Hills, MO 63127
314-842-4033 (tel.)
314-842-5957 (fax)
david@cochraneng.com
COCHRAN
• Civil Engineering
• Land Surveying
• Architecture
• Site Development
• General Consulting
• Master Planning
CERTIFICATE OF AUTHORITY NUMBER - 006937

Three working days prior to the start of any excavation within this jurisdiction call 1-800-DIG-RITE for utility location information.

All OSHA rules & regulations established for the type of construction required by these contract documents shall be followed (ie. Trenching, Blasting, etc.)

MILLER STREET PHASE 2 IMPROVEMENTS
FEDERAL PROJECT NO. STP-5401(632)
NEW HAVEN, MISSOURI

DATE:	REVISION:	DWN. BY:	APP'D. BY:

DWN. BY: M.R.B. APP'D. BY: T.D.T.
DATE: FEBRUARY 2011
SCALE: 1" = 50'
PROJ. NO: SC10-224
DWG. NO: S-2

SITE PLAN

Drawing name: J:\SC10-221\SITE_PH2.dwg Tab: S-2 Plotted on: Feb 24, 2011 - 8:10am Plotted by: mspalding

SITE PLAN

** CONTRACTOR SHALL RELOCATE ALL EXISTING SIGNS, PLANTERS, MAILBOXES, RUN-OFF PIPES AND PRIVATE LIGHTS AS NECESSARY FOR THE CONSTRUCTION OF THE IMPROVEMENTS. NEW LOCATIONS SHALL BE AS DIRECTED BY THE ENGINEER. SEE THE REMOVAL OF IMPROVEMENTS SECTION IN THE SPECIFICATIONS. **

** CONTRACTOR SHALL ADJUST TO GRADE ALL UTILITIES NECESSARY TO BRING THE UTILITY TO THE GRADE OF THE NEW PAVEMENT. SEE THE UTILITY ADJUSTMENT SECTION OF THE SPECIFICATIONS. **

** CONTRACTOR SHALL REMOVE AND REPLACE ALL EXISTING PRIVATE SIDEWALKS AS NECESSARY FOR THE CONSTRUCTION OF THE IMPROVEMENTS. PRIVATE SIDEWALKS SHALL BE SAWCUT AT THE RIGHT-OF-WAY OR NEAREST JOINT AS DIRECTED BY THE ENGINEER. SEE THE REMOVAL OF IMPROVEMENTS SECTION IN THE SPECIFICATIONS. **

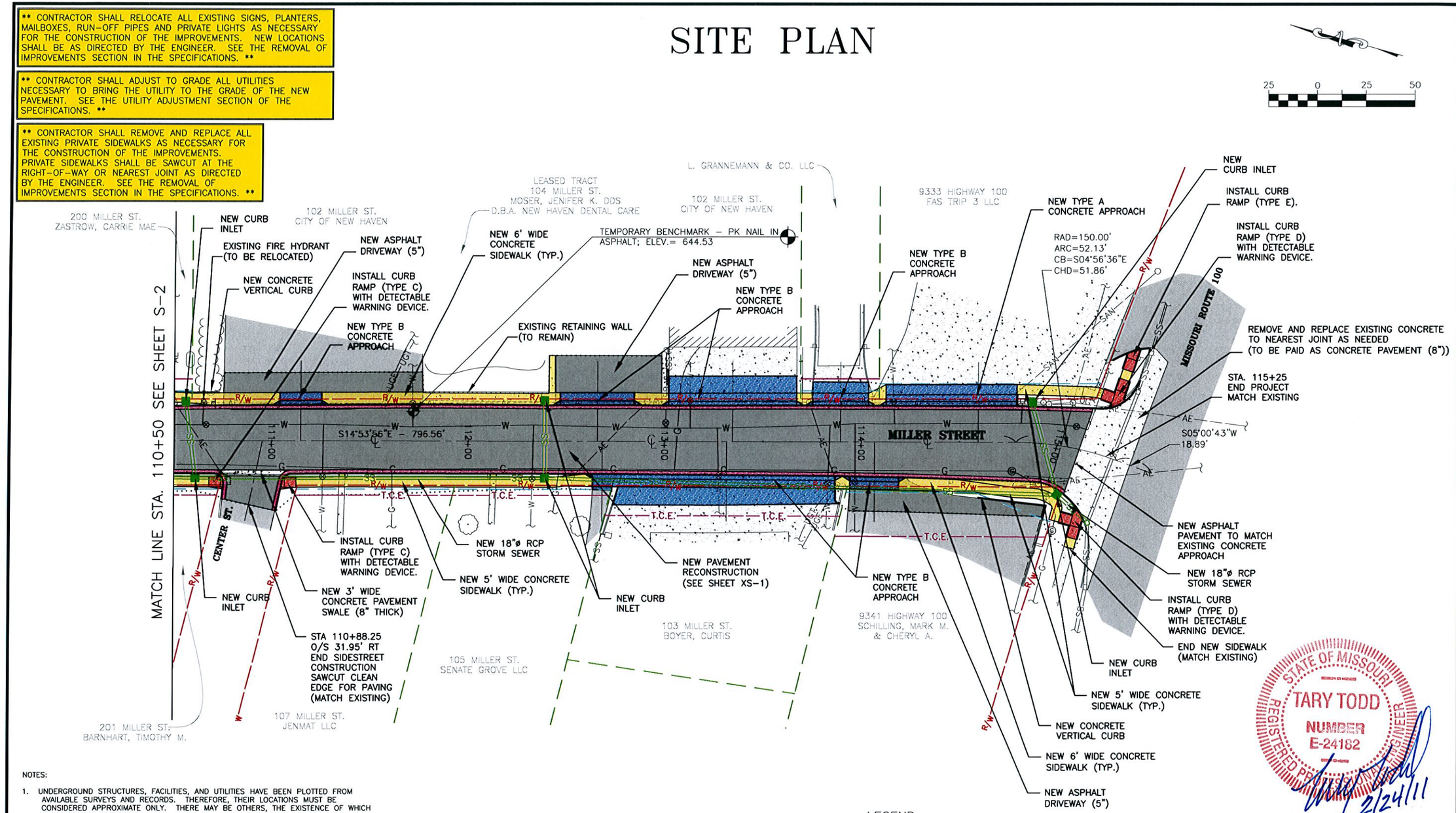

STATE OF MISSOURI
TARY TODD
NUMBER
E-24182
REGISTERED PROFESSIONAL ENGINEER
2/24/11

NOTES:

1. UNDERGROUND STRUCTURES, FACILITIES, AND UTILITIES HAVE BEEN PLOTTED FROM AVAILABLE SURVEYS AND RECORDS. THEREFORE, THEIR LOCATIONS MUST BE CONSIDERED APPROXIMATE ONLY. THERE MAY BE OTHERS, THE EXISTENCE OF WHICH IS PRESENTLY NOT KNOWN.
2. TEMPORARY BENCHMARK IS A PK NAIL IN ASPHALT LOCATED ON THE EAST SIDE OF MILLER STREET APPROXIMATELY 365 FEET NORTH OF THE INTERSECTION OF HIGHWAY 100, ELEV.= 644.53. SITE BENCHMARK IS MISSOURI GRS MONUMENT FR-82, ELEV.= 704.72.
3. THE CONTRACTOR IS SPECIFICALLY CAUTIONED THAT THE LOCATION AND/OR ELEVATION OF EXISTING UTILITIES AS SHOWN ON THESE PLANS IS BASED ON RECORDS OF VARIOUS UTILITY COMPANIES AND, WHERE POSSIBLE, MEASUREMENTS TAKEN IN THE FIELD. THE INFORMATION IS NOT TO BE RELIED ON AS BEING EXACT OR COMPLETE. THE CONTRACTOR MUST CALL THE APPROPRIATE UTILITY COMPANY AT LEAST 48 HOURS BEFORE ANY EXCAVATION TO REQUEST EXACT FIELD LOCATION OF UTILITIES. LOCATION, RELOCATION AND CONNECTION OF THE UTILITIES SHALL BE COORDINATED WITH THE UTILITY COMPANIES.
4. TOPOGRAPHIC INFORMATION AS SHOWN HEREON PER FIELD WORK PERFORMED BY T.J.V. & D.P.R. OF COCHRAN, DATED JULY, 2010.
5. THIS DRAWING DOES NOT CONSTITUTE A BOUNDARY SURVEY.
6. THIS PROJECT IS ORIENTED TO GRID NORTH DERIVED FROM GPS OBSERVATIONS OF MISSOURI GRS MONUMENT FR-82 USING MODOT'S RTK GPS NETWORK.
7. THIS SITE LIES WITHIN "ZONE C", AREAS OF MINIMAL FLOODING PER FEMA FLOOD INSURANCE RATE MAP COMMUNITY-PANEL NUMBER 290133 0001A, EFFECTIVE DATE FEBRUARY 18, 1981.

LEGEND

PROPERTY LINE		EXISTING AERIAL ELECTRIC	AE	EXISTING GAS VALVE		NEW ASPHALT PAVEMENT	
EXISTING RIGHT-OF-WAY	R/W	EXISTING SANITARY SEWER	SAN	EXISTING FIRE HYDRANT		NEW CONCRETE PAVEMENT	
CENTERLINE OF ROAD	℄	EXISTING WATER MAIN	W	EXISTING MAILBOX		NEW CONCRETE APPROACH	
EXISTING MAJOR CONTOUR	970	EXISTING GAS MAIN	G	EXISTING SIGN		NEW SIDEWALK	
EXISTING MINOR CONTOUR		EXISTING STORM SEWER	SS	EXISTING FENCE	X	NEW CURB RAMP	
EXISTING BUILDING		EXISTING UNDERGROUND TELEPHONE	UGT	EXISTING LIGHT		NEW CURB AND GUTTER	
EXISTING CONCRETE PAVEMENT		EXISTING FIBER OPTIC	FO	EXISTING BUSH		NEW STORM SEWER	SS
EXISTING GRAVEL		EXISTING WATER VALVE		EXISTING TREE		NEW CURB INLET	
EXISTING ASPHALT PAVEMENT		EXISTING WATER METER	WM	EXISTING TREELINE		NEW WATER MAIN	W
		EXISTING UTILITY POLE		EXISTING UTILITY (TERMINUS UNKNOWN)		NEW GATE VALVE	
		EXISTING GUY WIRE				NEW FIRE HYDRANT	
						NEW GAS MAIN	G
						NEW GAS VALVE	
						TEMPORARY CONSTRUCTION EASEMENT	T.C.E.
						PERMANENT EASEMENT	

12963 Maurer Industrial Dr.
Sunset Hills, MO 63127
314-842-4033 (tel.)
314-842-5957 (fax)
dave@cochraneng.com
COCHRAN
• Civil Engineering
• Land Surveying
• Architecture
• Site Development
• General Consulting
• Master Planning
CERTIFICATE OF AUTHORITY NUMBER - 006937

Three working days prior to the start of any excavation on this site, contractor shall call 1-800-DIG-RITE for utility location information.

All OSHA rules & regulations established for the type of construction required by these plans shall be strictly followed (ie. Trenching, Blasting, etc.)

MILLER STREET PHASE 2 IMPROVEMENTS
FEDERAL PROJECT NO. STP-5401(632)
NEW HAVEN, MISSOURI

DATE:	REVISION:	DWN. BY:	APP'D. BY:

DWN. BY: M.R.B.
APP'D. BY: T.D.T.
DATE: FEBRUARY 2011
SCALE: 1" = 50'
PROJ. NO: SC10-224
DWG. NO: S-3

SITE PLAN

Drawing name: J:\SC10-221\SITE_PH2.dwg Tab: S-3 Plotted on: Oct 18, 2011 - 8:31am Plotted by: nclark

ROAD PLAN AND PROFILE

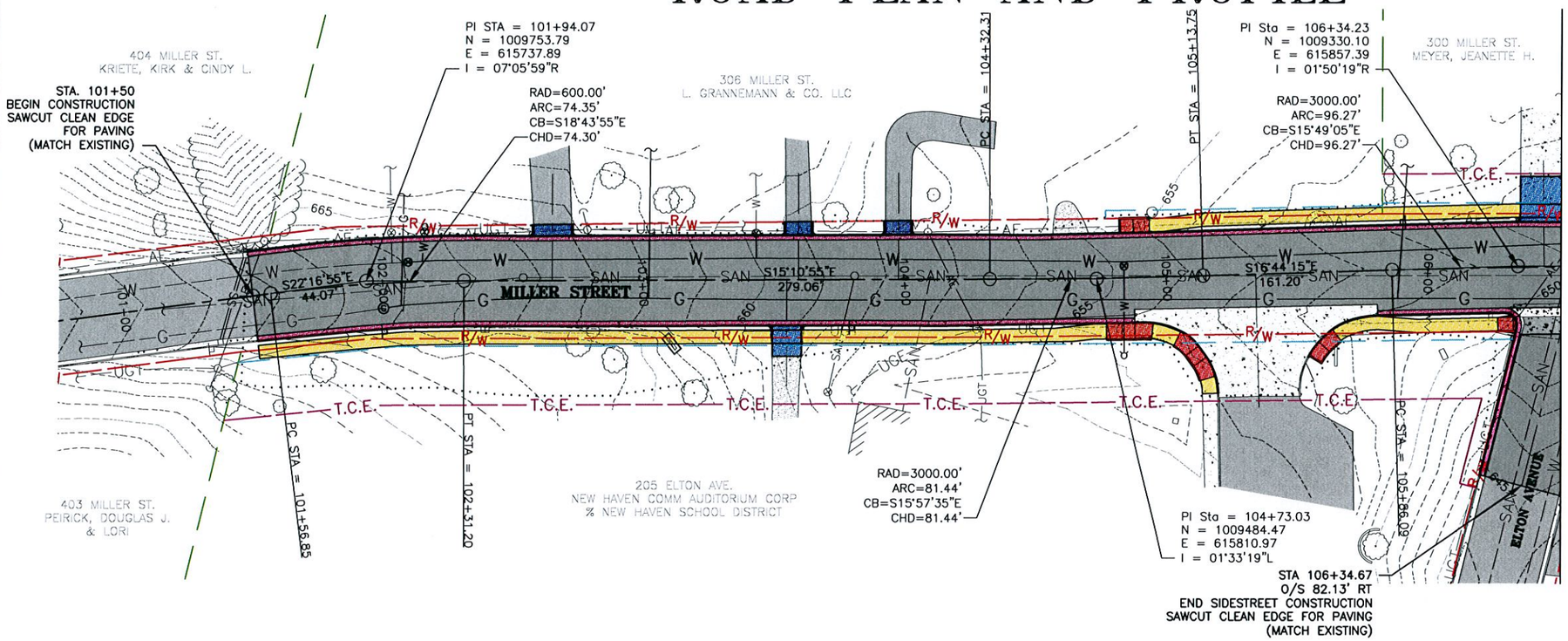

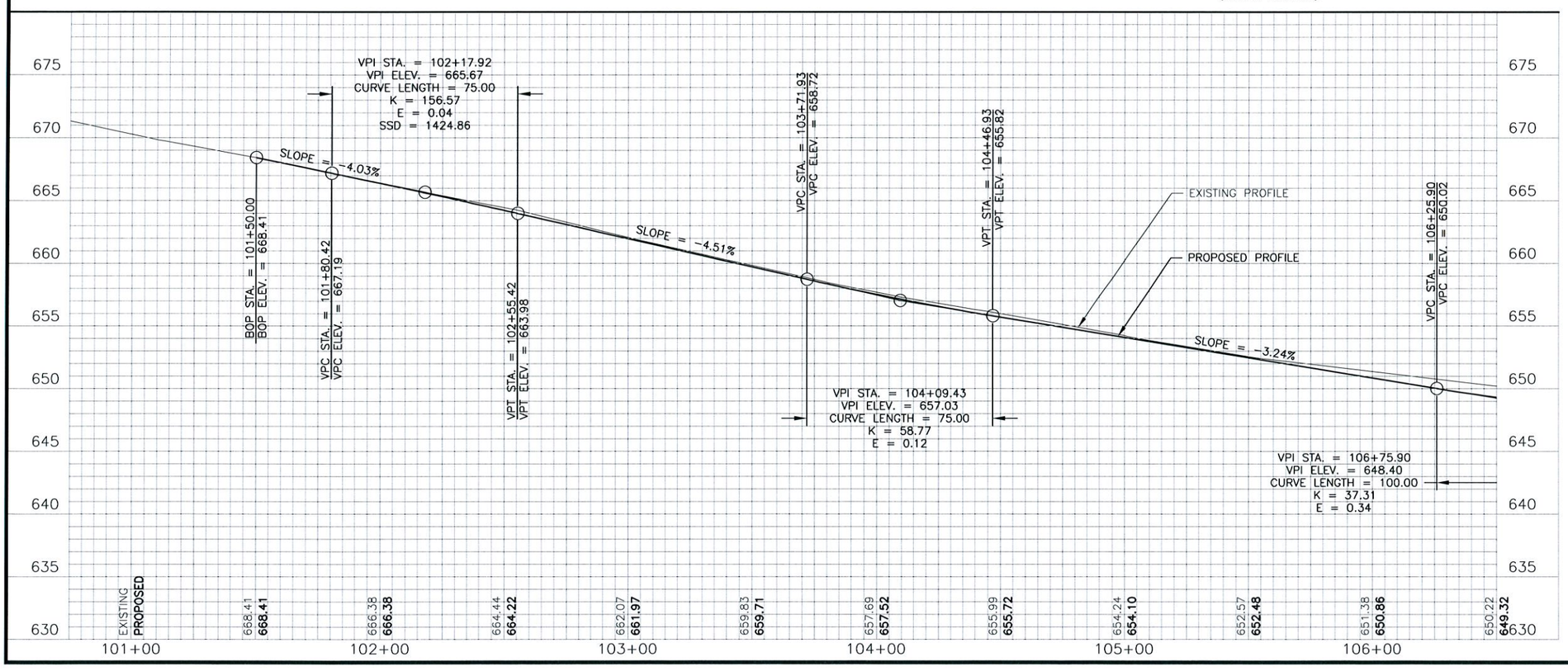

STATE OF MISSOURI
TARY TODD
NUMBER
E-24182
REGISTERED PROFESSIONAL ENGINEER
3/24/11

12963 Maurer Industrial Dr. 314-842-4033 (tel.)
Sunset Hills, MO 63127 314-842-5957 (fax)
david@cochraneng.com
COCHRAN
• Civil Engineering
• Land Surveying
• Architecture
• Site Development
• General Consulting
• Master Planning
CERTIFICATE OF AUTHORITY NUMBER - 006937

Three working days prior to the start of any excavation within the project limits, call 1-800-DIG-RITE for utility location information.

All OSHA rules & regulations established for the type of construction required by these contract documents, shall be followed (ie. Trenching, Blasting, etc.)

MILLER STREET PHASE 2 IMPROVEMENTS
FEDERAL PROJECT NO. STP-5401(632)
NEW HAVEN, MILLER COUNTY, MISSOURI

ROAD PLAN AND PROFILE STA. 101+50 TO STA. 106+50

DATE:	REVISION:	DWN. BY:	APPD. BY:

DWN. BY: M.R.B.	APPD. BY: T.D.T.
DATE: FEBRUARY 2011	
HORIZONTAL SCALE: 1" = 50'	
VERTICAL SCALE: 1" = 10'	
PROJ. NO: SC10-224	
DWG. NO: RD-1	

Drawing name: J:\SC10-221\RCp01003.dwg Tab: RD-1 Plotted on: Oct 18, 2011 - 9:35am Plotted by: nclark

ROAD PLAN AND PROFILE

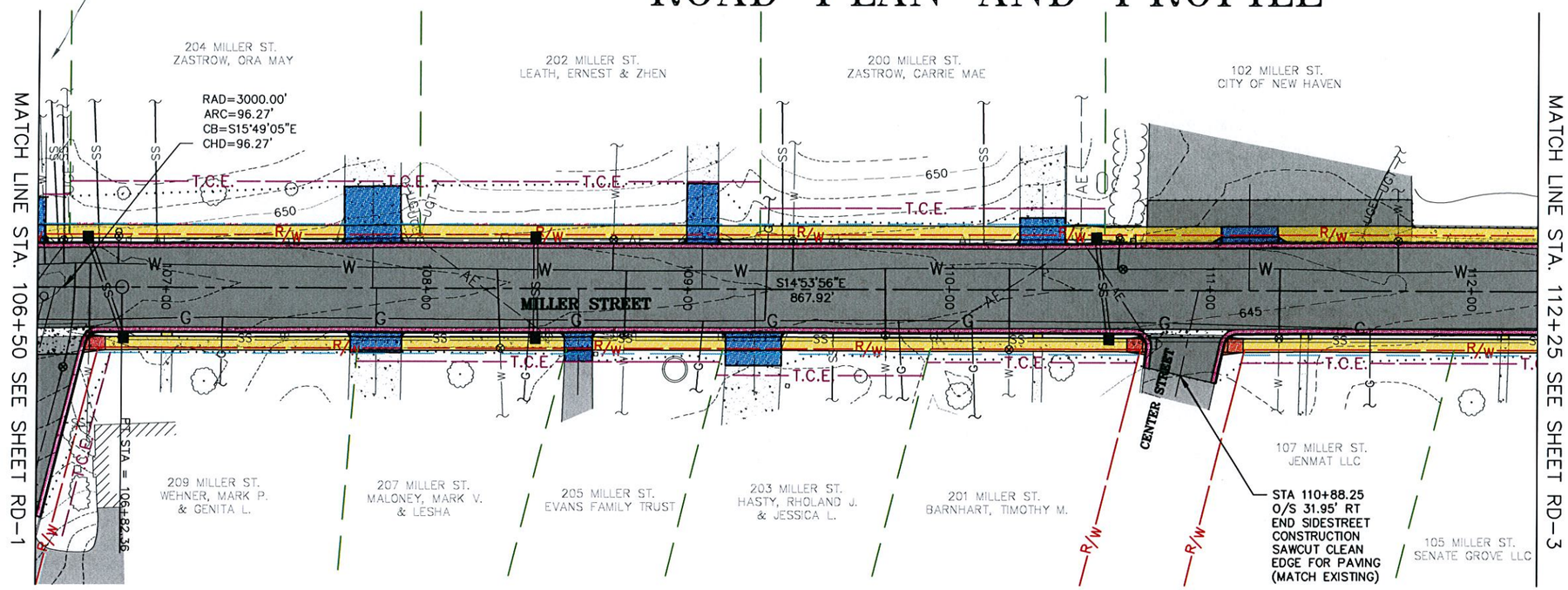

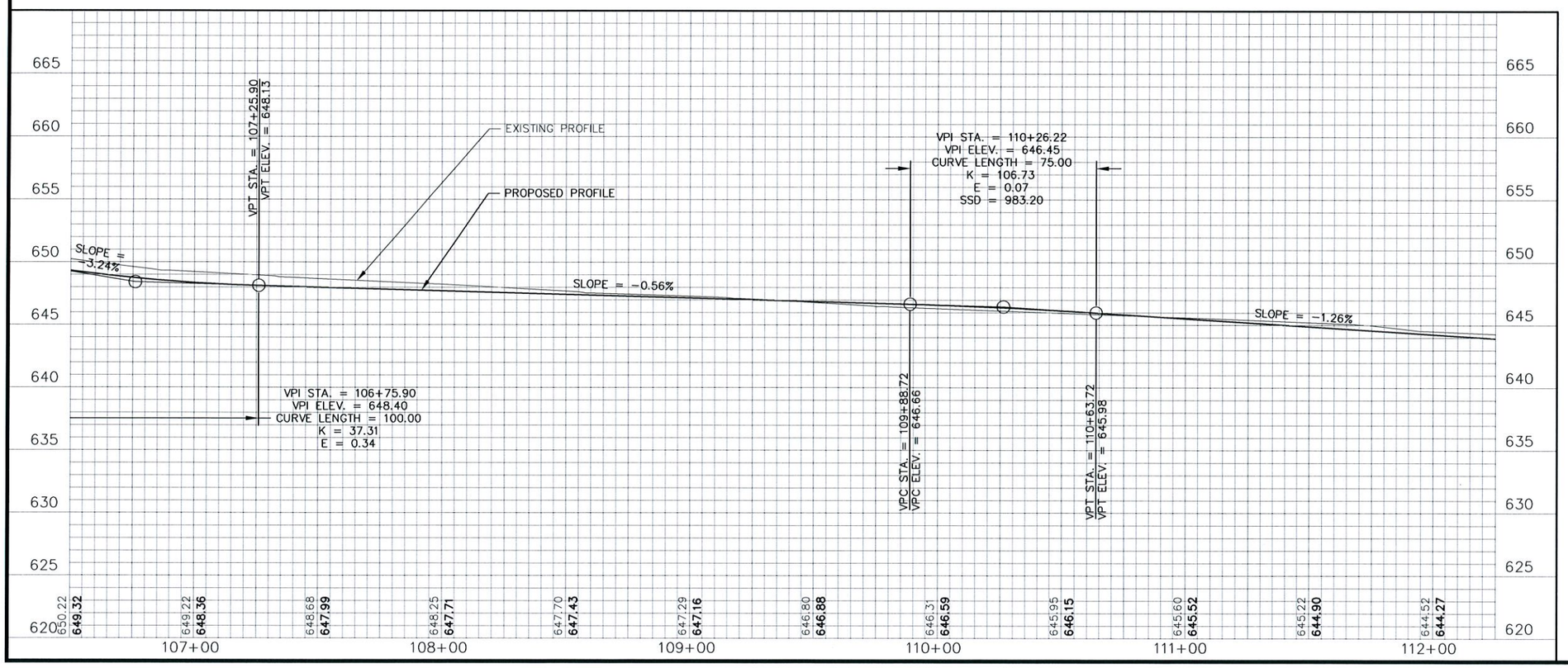

12963 Maurer Industrial Dr.
Sunset Hills, MO 63127
314-842-4033 (tel.)
314-842-5957 (fax)
david@cochraneng.com
COCHRAN
• Civil Engineering
• Land Surveying
• Architecture
• Site Development
• General Consulting
• Master Planning
CERTIFICATE OF AUTHORITY NUMBER - 006937

Three working days prior to the start of any excavation on this site contact and call 1-800-DIG-RITE for utility location information.

All OSHA rules & regulations established for the type of construction required by these contract documents shall be followed (ie. Trenching, Blasting, etc.)

MILLER STREET PHASE 2 IMPROVEMENTS
FEDERAL PROJECT NO. STP-5401(632)
NEW HAVEN, MISSOURI

ROAD PLAN AND PROFILE STA. 106+50 TO STA. 112+25

REVISION:	DWN. BY:	APPD. BY:
DATE:		

DWN. BY: M.R.B. APPD. BY: T.D.T.
DATE: FEBRUARY 2011
HORIZONTAL SCALE: 1" = 50'
VERTICAL SCALE: 1" = 10'
PROJ. NO: SC10-224
DWG. NO: RD-2

STATE OF MISSOURI
TARY TODD
NUMBER E-24182
REGISTERED PROFESSIONAL ENGINEER
2/24/11

Drawing name: J:\SC10-221\RCp02003.dwg Tab: RD-2 Plotted on: Feb 24, 2011 - 8:11am Plotted by: mspalding

ROAD PLAN AND PROFILE

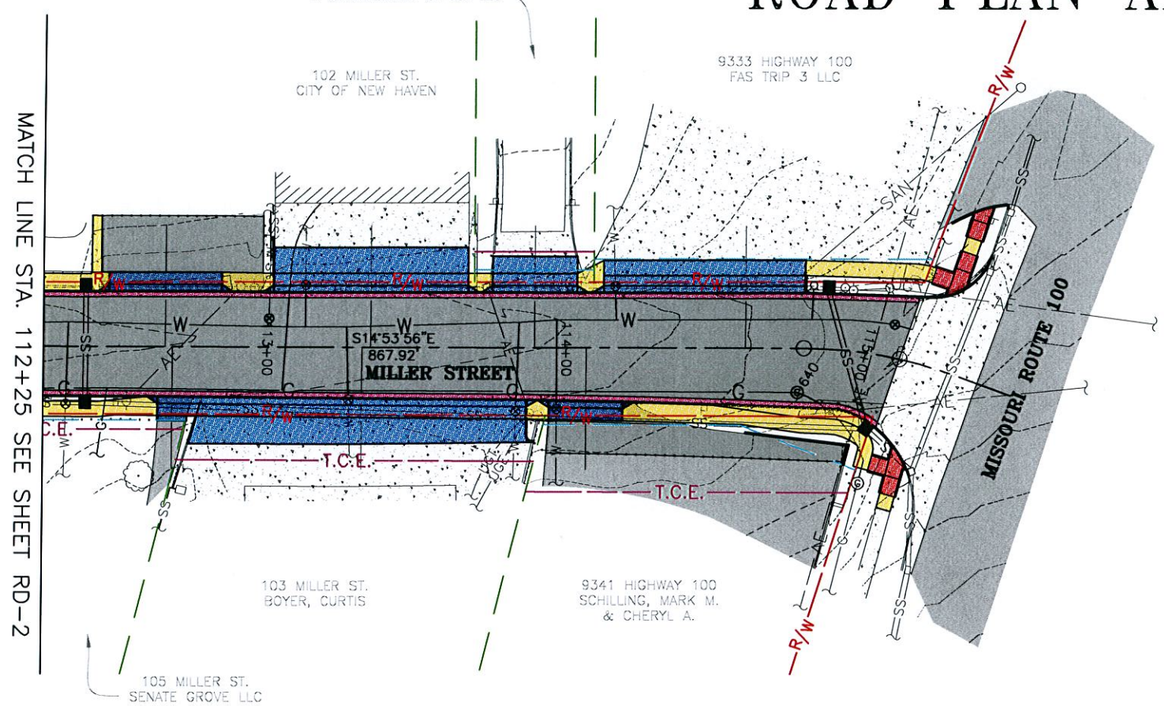

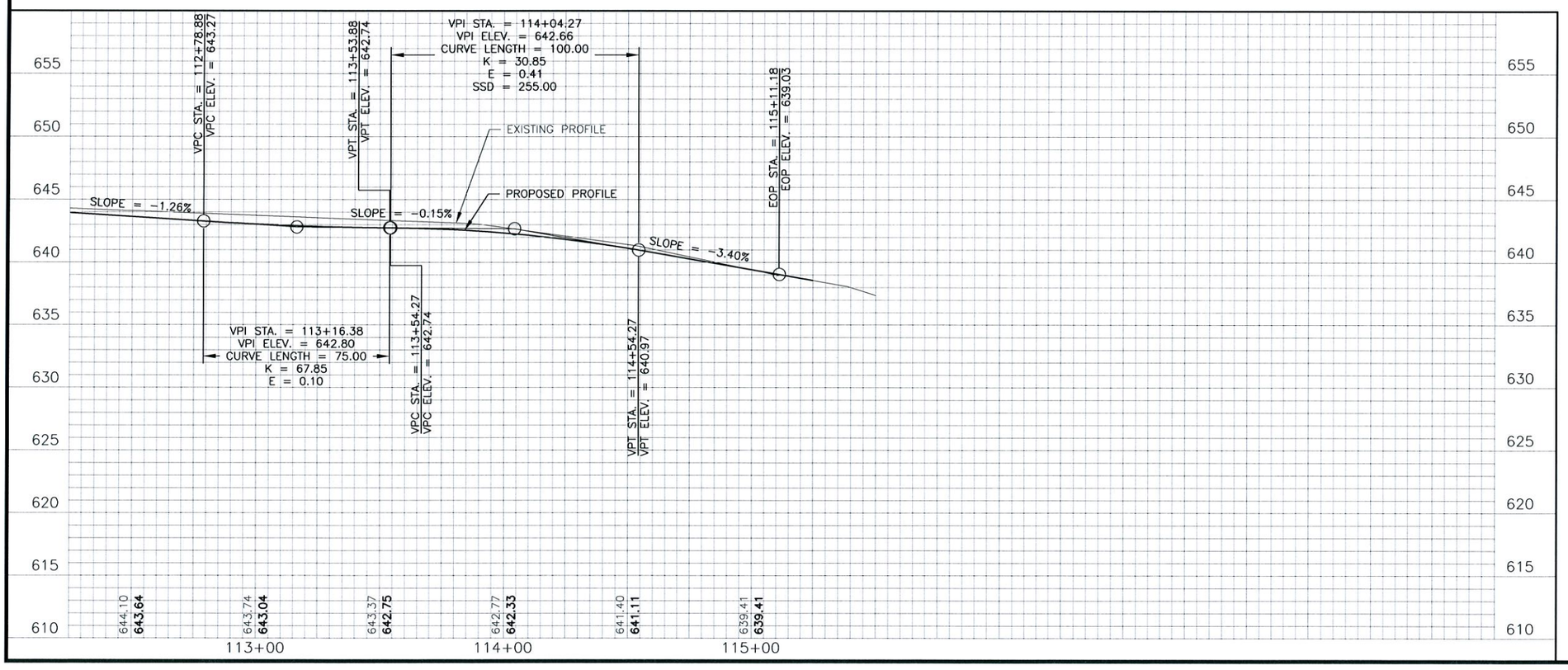

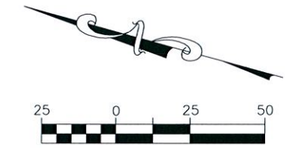

COCHRAN
12963 Maurer Industrial Dr.
Sunset Hills, MO 63127
314-842-4033 (tel.)
314-842-5957 (fax)
dovid@cochraneng.com
• Civil Engineering
• Land Surveying
• Architecture
• Site Development
• General Consulting
• Master Planning
CERTIFICATE OF AUTHORITY NUMBER - 008937

Three working days prior to the start of any excavation on this site, contractor shall call 1-800-344-7483 for utility location information.

All OSHA rules & regulations established for the type of construction required by these plans shall be strictly followed (ie. Trenching, Bracing, etc.)

MILLER STREET PHASE 2 IMPROVEMENTS

FEDERAL PROJECT NO. STP-5401(632)

NEW HAVEN, MISSOURI

ROAD PLAN AND PROFILE STA. 112+25 TO STA. 115+11

DATE:	REVISION:	DWN. BY:	APP'D. BY:

DWN. BY: M.R.B.	APP'D. BY: T.D.T.
DATE: FEBRUARY 2011	
HORIZONTAL SCALE: 1" = 50'	
VERTICAL SCALE: 1" = 10'	
PROJ. NO: SC10-224	
DWG. NO: RD-3	

STATE OF MISSOURI
TARY TODD
NUMBER
E-24182
REGISTERED PROFESSIONAL ENGINEER
2/24/11

Drawing name: J:\SC10-221\RCp03003.dwg Tab: RD-3 Plotted on: Oct 18, 2011 - 9:38am Plotted by: nclark

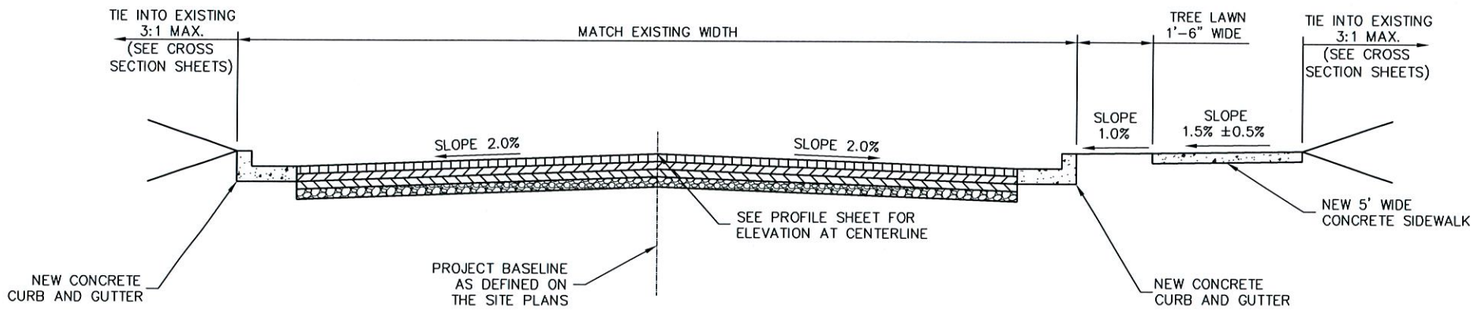

TYPICAL PAVEMENT SECTION
STA. 101+50 – STA. 104+82
NO SCALE

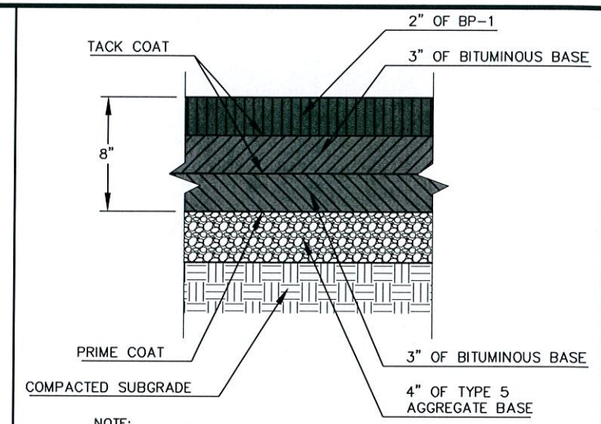

NOTE:
1. THE GRADE OF ASPHALT BINDER SHALL BE PG 64-22.
2. EXISTING ASPHALT ROAD SHALL BE SAWCUT FULL DEPTH AT STA. 101+50 OF THE PROJECT. THIS WORK SHALL BE CONSIDERED INCIDENTAL TO THE PROJECT.
3. TACK COAT SHALL BE APPLIED BETWEEN LAYERS AS SHOWN ABOVE. TACK COAT SHALL BE APPLIED AT A RATE OF 0.05 TO 0.15 GALLONS PER SQUARE YARD OF SURFACE. THIS WORK SHALL BE CONSIDERED INCIDENTAL TO THE PROJECT.
4. PRIME COAT SHALL BE APPLIED BETWEEN AGGREGATE BASE AND FIRST ASPHALT LAYER. PRIME COAT SHALL BE APPLIED AT A RATE OF 0.2 TO 0.5 GALLONS PER SQUARE YARD OF SURFACE. THIS WORK SHALL BE CONSIDERED INCIDENTAL TO THE PROJECT.

PAVEMENT RECONSTRUCTION ROAD SECTION
NO SCALE

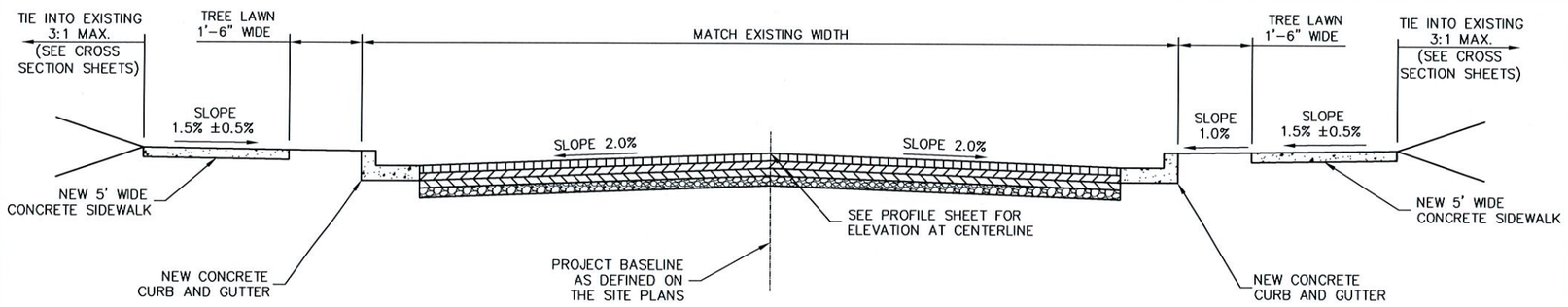

TYPICAL PAVEMENT SECTION
STA. 104+82 – STA. 110+54
NO SCALE

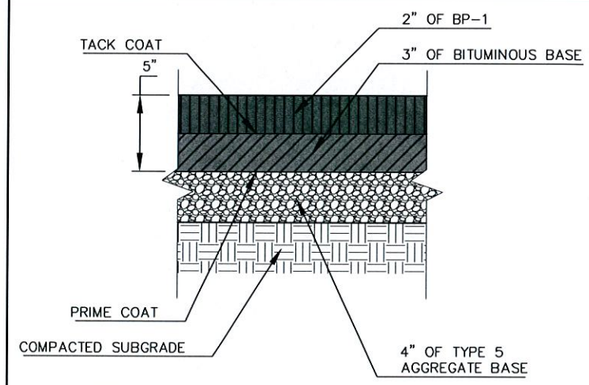

NOTE:
1. THE GRADE OF ASPHALT BINDER SHALL BE PG 64-22.
2. EXISTING ASPHALT PARKING LOT SHALL BE SAWCUT FULL DEPTH. THIS WORK SHALL BE CONSIDERED INCIDENTAL TO THE PROJECT.
3. TACK COAT SHALL BE APPLIED BETWEEN LAYERS AS SHOWN ABOVE. TACK COAT SHALL BE APPLIED AT A RATE OF 0.05 TO 0.15 GALLONS PER SQUARE YARD OF SURFACE. THIS WORK SHALL BE CONSIDERED INCIDENTAL TO THE PROJECT.
4. PRIME COAT SHALL BE APPLIED BETWEEN AGGREGATE BASE AND FIRST ASPHALT LAYER. PRIME COAT SHALL BE APPLIED AT A RATE OF 0.2 TO 0.5 GALLONS PER SQUARE YARD OF SURFACE. THIS WORK SHALL BE CONSIDERED INCIDENTAL TO THE PROJECT.

ASPHALT DRIVEWAY SECTION
NO SCALE

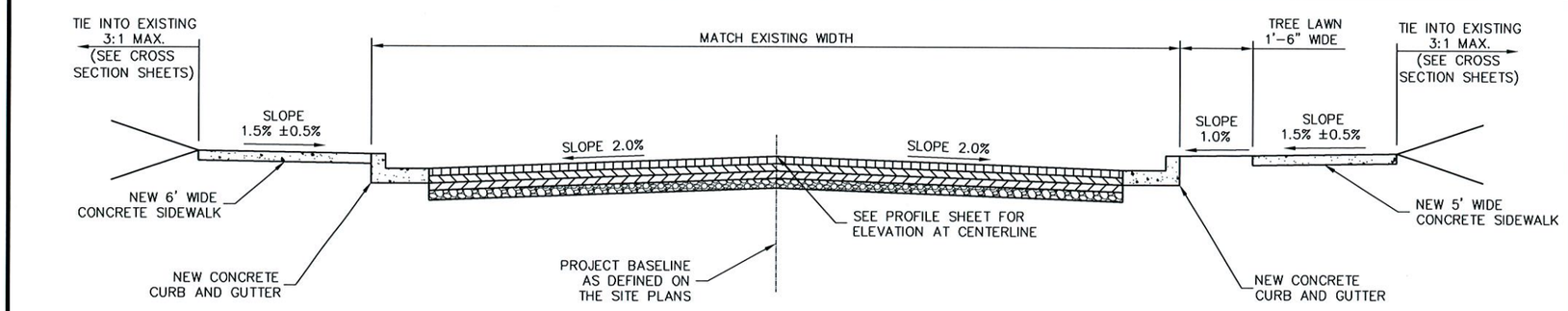

TYPICAL PAVEMENT SECTION
STA. 110+54 – STA. 112+43
NO SCALE

STATE OF MISSOURI
TARY TODD
NUMBER
E-24182
REGISTERED PROFESSIONAL ENGINEER
2/24/11

COCHRAN
12963 Maurer Industrial Dr.
Sunset Hills, MO 63127
314-842-4033 (tel.)
314-842-5957 (fax)
david@cochranengineering.com
• Civil Engineering
• Land Surveying
• Architecture
• Site Development
• General Consulting
• Master Planning
CERTIFICATE OF AUTHORITY NUMBER – 006937

Three working days prior to the start of any excavation on this project contact call 1-800-DIGGERS for utility location information.

All OSHA rules & regulations established for the type of construction required by these plans shall be strictly followed (ex. trenching, Blasting, etc.)

MILLER STREET PHASE 2 IMPROVEMENTS
FEDERAL PROJECT NO. STP-5401(632)
NEW HAVEN, MISSOURI

TYPICAL PAVEMENT SECTION SHEET

DATE:	REVISION:	DRN. BY:	APP'D. BY:

DRN. BY: M.R.B. | APP'D. BY: T.D.T.
DATE: FEBRUARY 2011
SCALE: NO SCALE
PROJ. NO: SC10-224
DWG. NO: XS-1

Drawing name: J:\SC10-221\TYPICAL SECTIONS_PH 2.dwg Tab: XS-1 Plotted on: Feb 24, 2011 - 8:11am Plotted by: mspalding

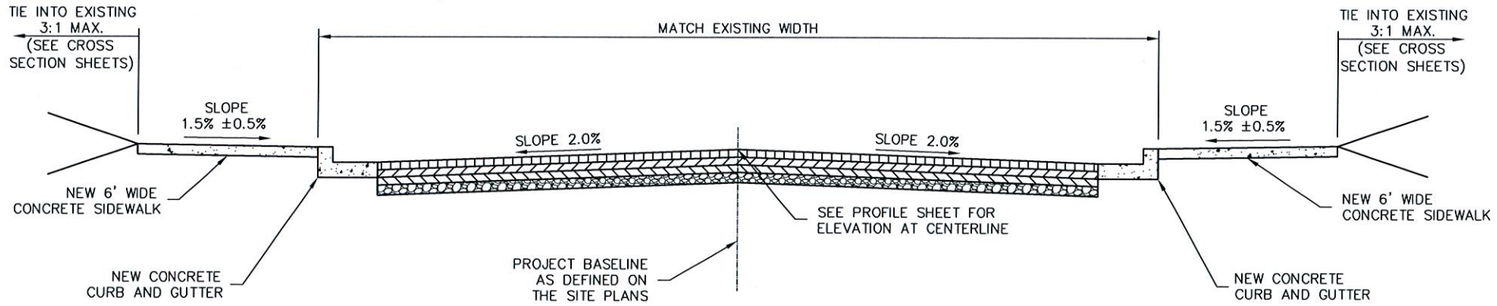

TYPICAL PAVEMENT SECTION
STA. 112+43 – STA. 114+09

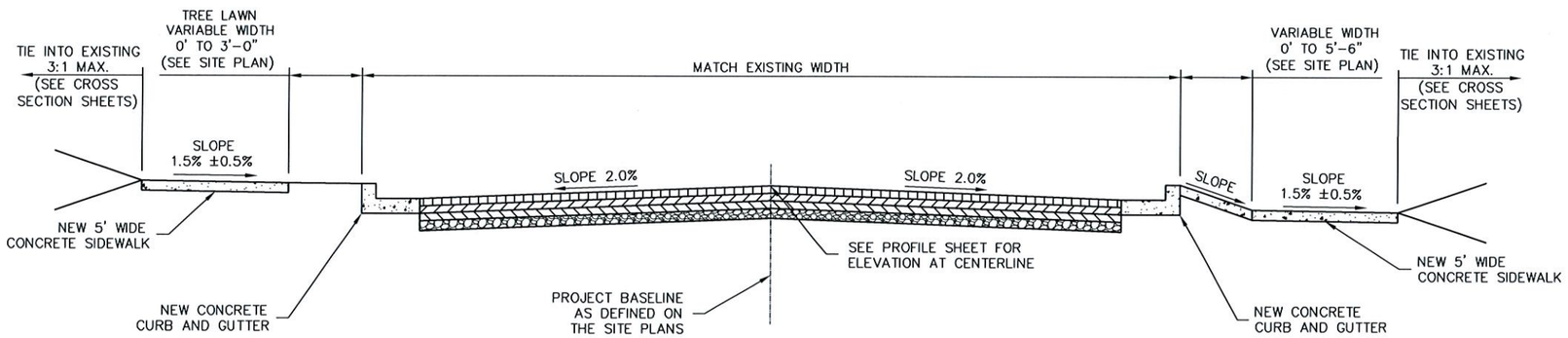

TYPICAL PAVEMENT SECTION
STA. 114+09 – STA. 115+11
NO SCALE

STATE OF MISSOURI
TARY TODD
NUMBER
E-24182
REGISTERED PROFESSIONAL ENGINEER
2/24/11

12963 Maurer Industrial Dr.
Sunset Hills, MO 63127
314-842-4033 (tel.)
314-842-5957 (fax)
david@cochraneng.com
COCHRAN
• Civil Engineering
• Land Surveying
• Architecture
• Site Development
• General Consulting
• Master Planning
CERTIFICATE OF AUTHORITY NUMBER – 006937

Three working days prior to the start of any excavation on this site you must call 1-800-DIG-RITE for utility location information.

All OSHA rules & regulations established for the type of construction required by these plans shall be strictly followed (i.e. Trenching, Blasting, etc.)

MILLER STREET PHASE 2 IMPROVEMENTS
FEDERAL PROJECT NO. STP-5401(632)
NEW HAVEN, MISSOURI

TYPICAL PAVEMENT SECTION SHEET

DATE:	REVISION:	DWN. BY:	APPD. BY:

DWN. BY: M.R.B.
APPD. BY: T.D.T.
DATE: FEBRUARY 2011
SCALE: NO SCALE
PROJ. NO: SC10-224
DWG. NO: XS-2

Drawing name: J:\SC10-221\TYPICAL SECTIONS_PH 2.dwg Tab: XS-2 Plotted on: Feb 24, 2011 – 8:11am Plotted by: mspalding

Drawing name: C:\Documents and Settings\nclark\Desktop\rc001003.dwg Tab: XS-3 Plotted on: Oct 18, 2011 - 9:28am Plotted by: nclark

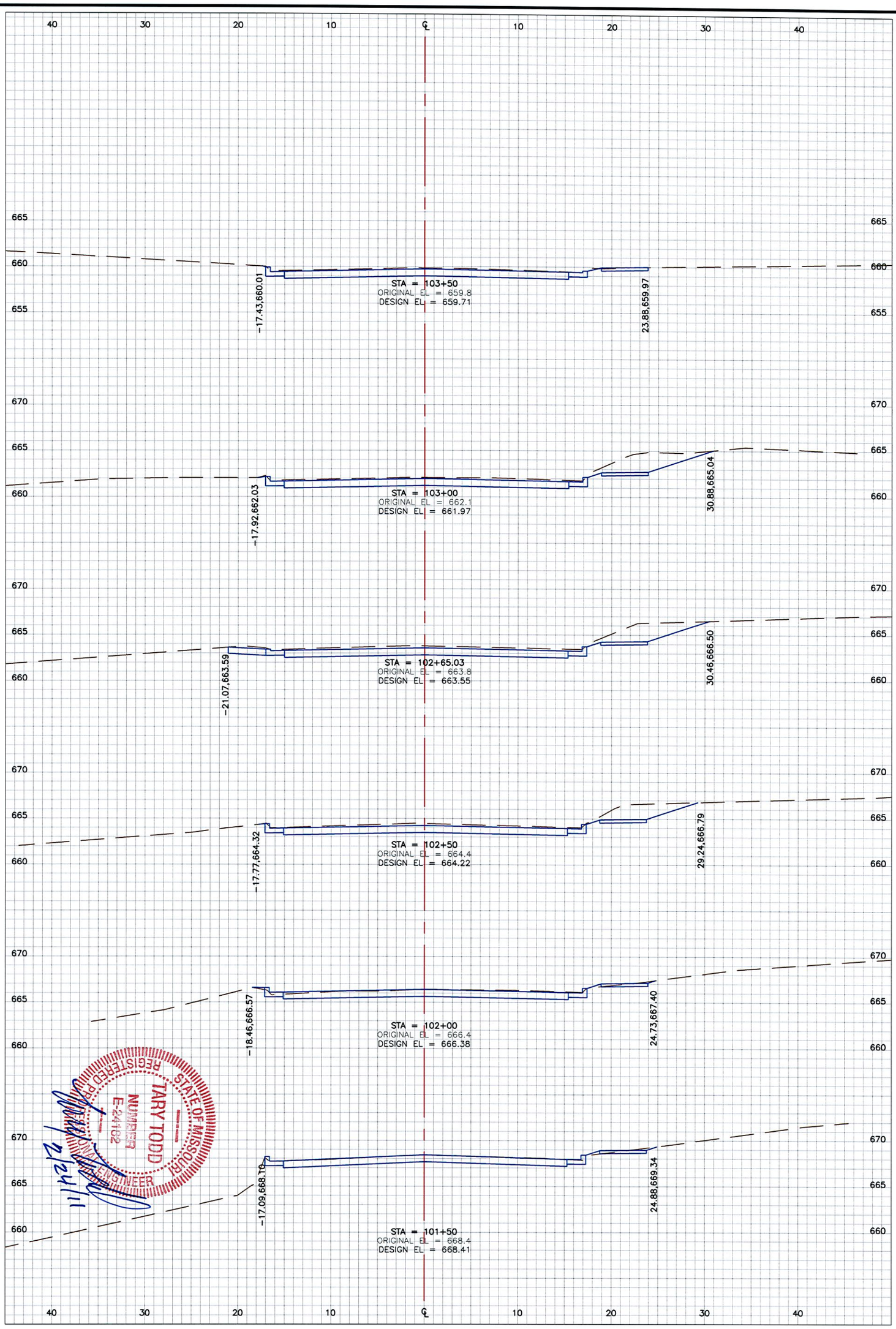

REGISTERED PROFESSIONAL ENGINEER
STATE OF MISSOURI
TARY TODD
NUMBER
E-24102
11/24/11

CROSS SECTIONS	DATE:	REVISION:		DWN. BY:	APPD. BY:
XS-3	DATE: FEBRUARY 2011	DWN. BY: M.R.B.			
	SCALE: 1" = 10'	APPD. BY: T.D.T.			
	PROJ. NO.: SC10-224				
	DWG. NO.:				

MILLER STREET PHASE 2 IMPROVEMENTS

FEDERAL PROJECT NO. STP-5401(632)

NEW HAVEN, MISSOURI

Three working days prior to the start of any excavation on this site, contractor shall call 1-800-DIG-RITE for utility location information.

All OSHA rules & regulations established for the type of construction required by these plans shall be strictly followed (ie. Trenching, Blasting, etc.)

COCHRAN
12963 Maurer Industrial Dr.
Sunset Hills, MO 63127
314-842-4033 (tel.)
314-842-5957 (fax)
david@cochraneng.com
• Civil Engineering
• Land Surveying
• Architecture
• Site Development
• General Consulting
• Master Planning
CERTIFICATE OF AUTHORITY NUMBER - 006937

CROSS SECTIONS

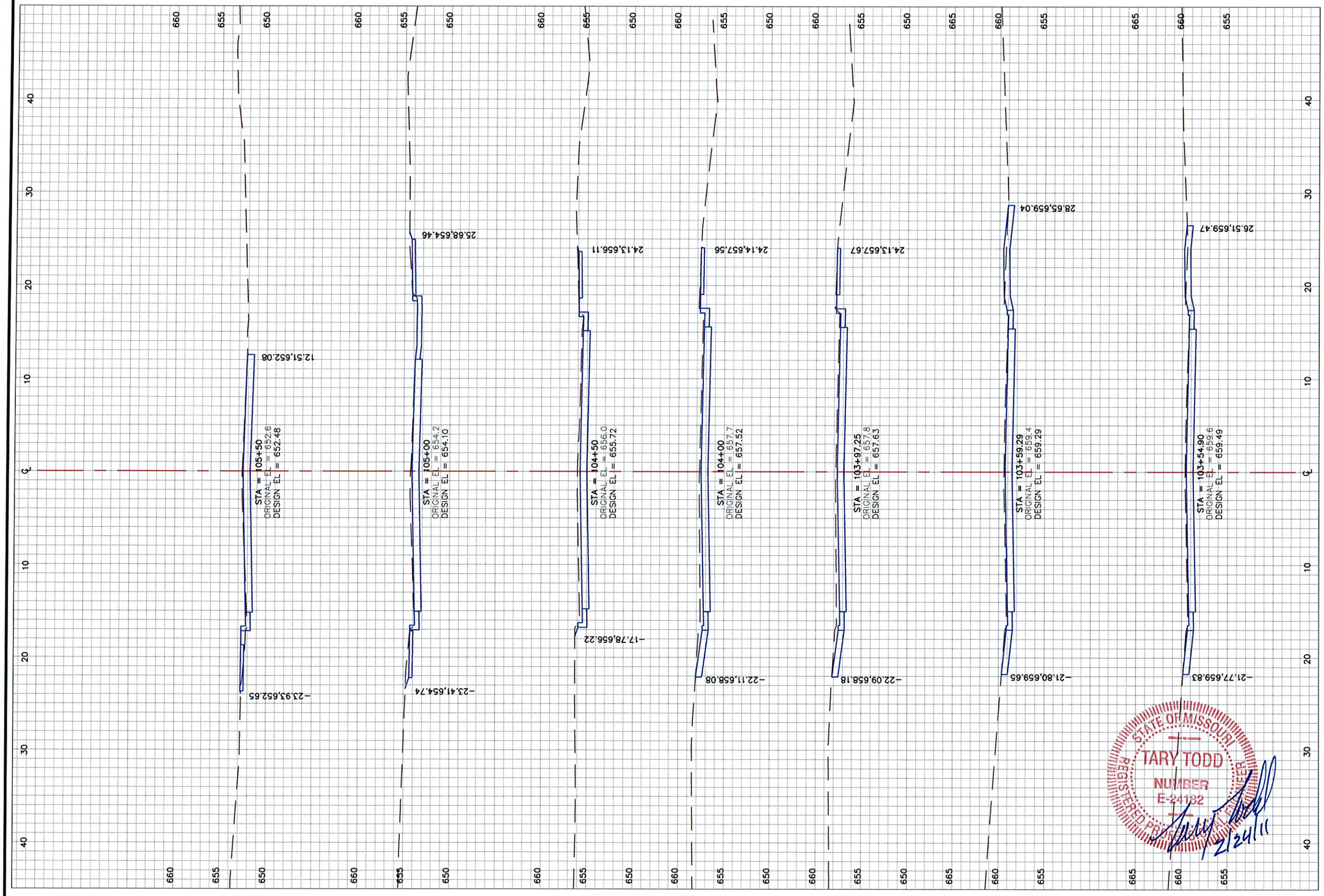

STATE OF MISSOURI
TARY TODD
NUMBER
E-24192
REGISTERED PROFESSIONAL ENGINEER
2/24/11

12983 Maurer Industrial Dr.
Sunset Hills, MO 63127
314-842-4033 (tel.)
314-842-5957 (fax)
cochran@cochranengr.com
COCHRAN
• Civil Engineering
• Land Surveying
• Architecture
• Site Development
• General Consulting
• Master Planning
CERTIFICATE OF AUTHORITY NUMBER - 006937

Three working days prior to the start of any excavation on this site, contractor shall call 1-800-DIG-RITE for utility location information.

All OSHA rules & regulations applicable to the safety of construction required by these plans shall be strictly followed (ie. Trenching, Blasting, etc.)

MILLER STREET PHASE 2 IMPROVEMENTS

FEDERAL PROJECT NO. STP-5401(632)

NEW HAVEN, MISSOURI

DATE:	REVISION:	DWN. BY:	APPD. BY:

DWN. BY: M.R.B. APPD. BY: T.D.T.

DATE: FEBRUARY 2011

SCALE: 1" = 10'

PROJ. NO: SC10-224

DWG. NO: *XS-4*

CROSS SECTIONS

Drawing name: J:\SC10-221\rc002003.dwg Tab: XS-4 Plotted on: Feb 24, 2011 - 8:11am Plotted by: mspalding

Drawing name: J:\SC10-221\rc003003.dwg Tab: XS-5 Plotted on: Feb 24, 2011 - 8:11am Plotted by: mspalding

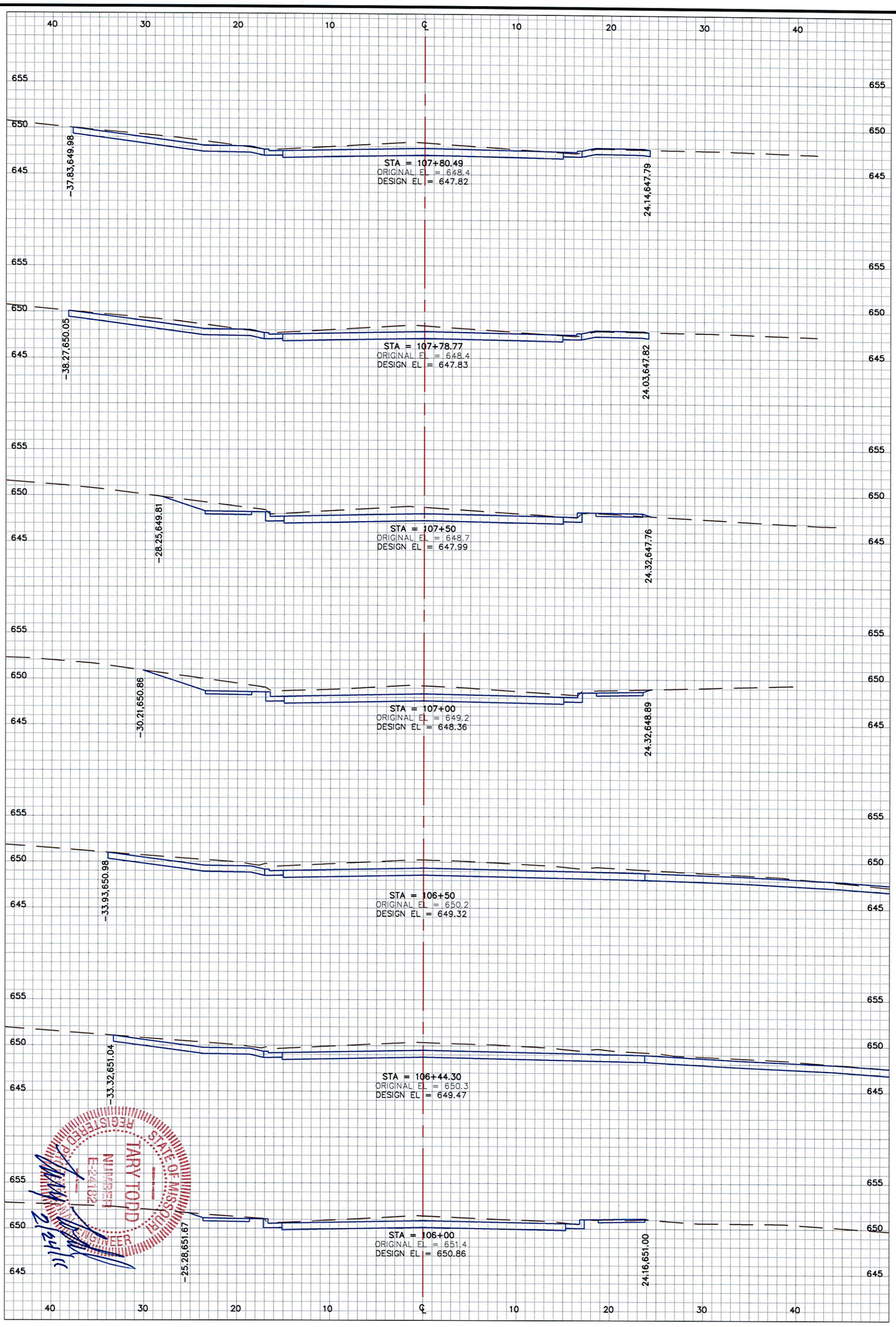

CROSS SECTIONS

XS-5

PROJ. NO. SC10-224

SCALE: 1" = 10'

DATE: FEBRUARY 2011

DRN. BY: M.R.B.

APPD. BY: T.D.T.

DATE:	REVISION:	DWN. BY:	APPD. BY:

MILLER STREET PHASE 2 IMPROVEMENTS

FEDERAL PROJECT NO. STP-5401(632)

NEW HAVEN, MISSOURI

Three working days prior to the start of any excavation on this site, contractor shall call 1-800-DIG-RITE for utility location information.

All OSHA rules & regulations established for the type of construction required by these plans shall be strictly followed (ie. Trenching, Blasting, etc.)

COCHRAN

12963 Maurer Industrial Dr.
Sunset Hills, MO 63127

314-842-4033 (tel.)
314-842-5957 (fax)
david@cochraneng.com

- Civil Engineering
- Land Surveying
- Architecture
- Site Development
- General Consulting
- Master Planning

CERTIFICATE OF AUTHORITY NUMBER - 006937

Drawing name: J:\SC10-221\rc004003.dwg Tab: XS-6 Plotted on: Feb 24, 2011 - 8:11am Plotted by: mspalding

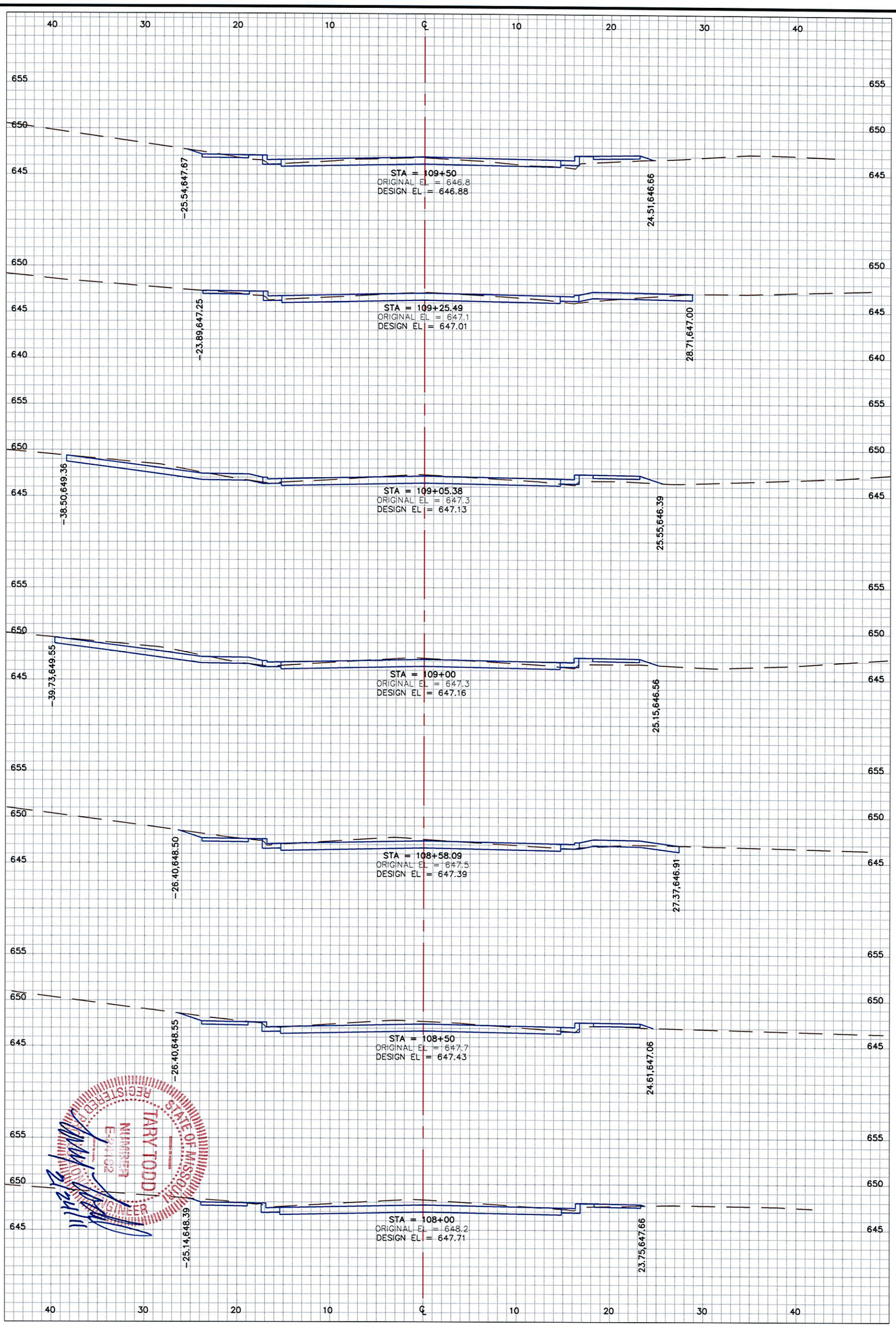

CROSS SECTIONS					
XS-6	DWG. NO.: SC10-224	PROJ. NO.: SCALE: 1" = 10'	DATE: FEBRUARY 2011	DWN. BY: M.R.B.	APPD. BY: T.D.T.

DATE:	REVISION:	DWN. BY:	APPD. BY:

MILLER STREET PHASE 2 IMPROVEMENTS

FEDERAL PROJECT NO. STP-5401(632)

NEW HAVEN, MISSOURI

Three working days prior to the start of any excavation on this site, contractor shall call 1-800-DIG-RITE for utility location information.

All OSHA rules & regulations established for the type of construction required by these plans shall be strictly followed (ie. Trenching, Blasting, etc.)

COCHRAN
12963 Maurer Industrial Dr.
Sunset Hills, MO 63127
314-842-4033 (tel.)
314-842-5957 (fax)
david@cochraneng.com
• Civil Engineering
• Land Surveying
• Architecture
• Site Development
• General Consulting
• Master Planning
CERTIFICATE OF AUTHORITY NUMBER - 006937

Drawing name: J:\SC10-221\rc005003.dwg Tab: XS-7 Plotted on: Feb 24, 2011 - 8:12am Plotted by: mspalding

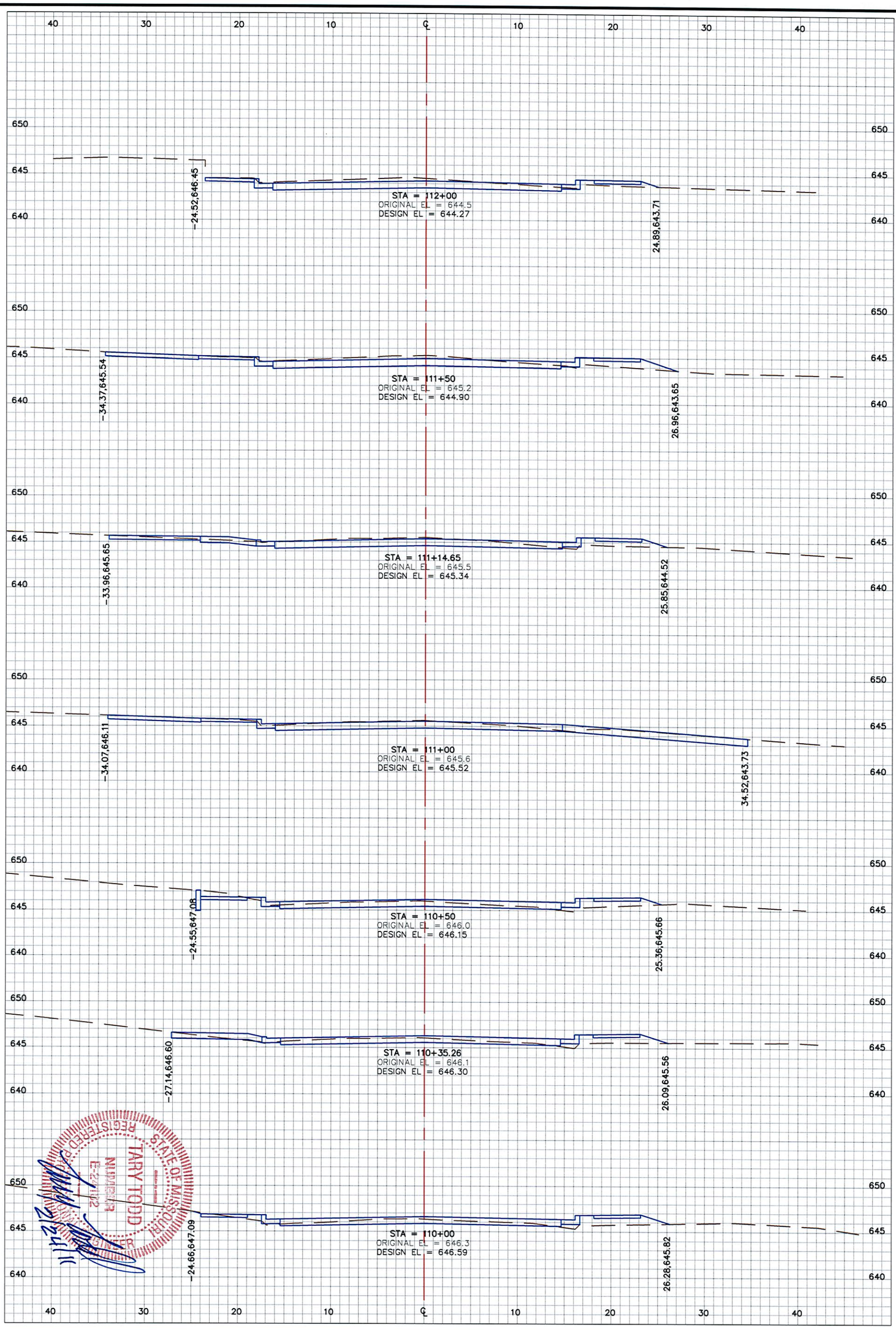

CROSS SECTIONS

STATE OF MISSOURI
REGISTERED
TARY TODD
NUMBER
E-2012
ER

2/21/11

CROSS SECTIONS						
XS-7	DWG. NO.	DATE	REVISION:	DWN. BY:	APPD. BY:	
	SC10-224					
	PROJ. NO.					
	1" = 10'					
	SCALE					
	FEBRUARY 2011					
	DATE					
	M.R.B.					
	DRN. BY:					
	T.D.T.					
	APPD. BY:					

MILLER STREET PHASE 2 IMPROVEMENTS

FEDERAL PROJECT NO. STP-5401(632)

NEW HAVEN, MISSOURI

Three working days prior to the start of any excavation on this site, contractor shall call 1-800-DIG-RITE for utility location information.

All OSHA rules & regulations established for the type of construction required by these plans shall be strictly followed (ie. Trenching, Blasting, etc.)

12963 Maurer Industrial Dr.
Sunset Hills, MO 63127
314-842-4033 (tel.)
314-842-5957 (fax)
david@cochraneng.com
COCHRAN
• Civil Engineering
• Land Surveying
• Architecture
• Site Development
• General Consulting
• Master Planning
CERTIFICATE OF AUTHORITY NUMBER - 006937

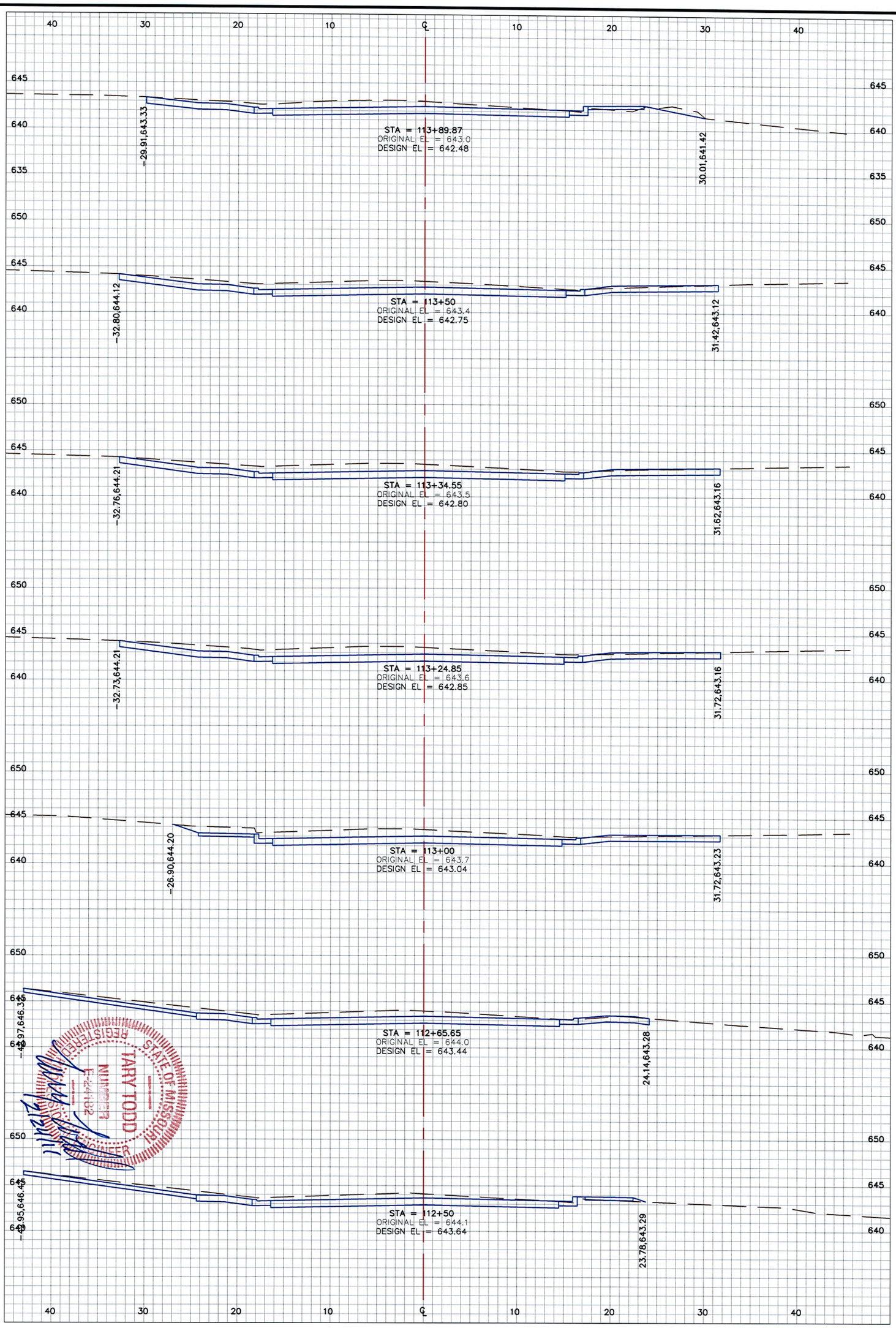

CROSS SECTIONS

XS-8

DWG. NO.	XS-8
PROJ. NO.	SC10-224
SCALE	1" = 10'
DATE	FEBRUARY 2011
DWN. BY:	M.R.B.
APPD. BY:	T.D.T.

DATE:	REVISION:	DWN. BY:	APPD. BY:

MILLER STREET PHASE 2 IMPROVEMENTS

FEDERAL PROJECT NO. STP-5401(632)

NEW HAVEN, MISSOURI

Three working days prior to the start of any excavation on this site, contractor shall call 1-800-DIG-RITE for utility location information.

All OSHA rules & regulations established for the type of construction required by these plans shall be strictly followed (ie. Trenching, Blasting, etc.)

COCHRAN
12963 Maurer Industrial Dr.
Sunset Hills, MO 63127
314-842-4033 (tel.)
314-842-5957 (fax)
david@cochraneng.com
• Civil Engineering
• Land Surveying
• Architecture
• Site Development
• General Consulting
• Master Planning
CERTIFICATE OF AUTHORITY NUMBER - 006937

CROSS SECTIONS

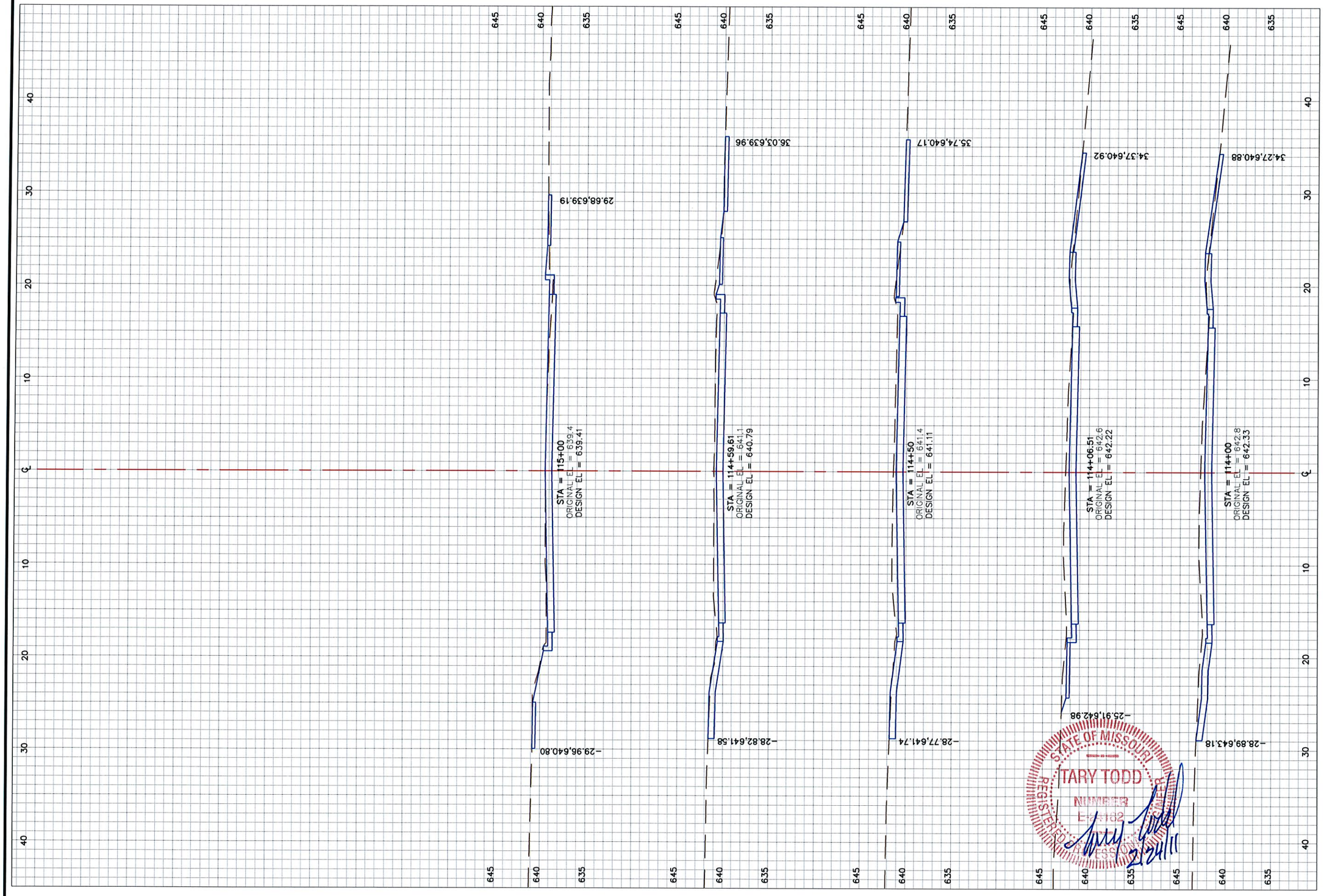

STATE OF MISSOURI
TARY TODD
NUMBER
E-27132
REGISTERED PROFESSIONAL ENGINEER
2/24/11

COCHRAN
12963 Maurer Industrial Dr.
Sunset Hills, MO 63127
314-842-4033 (tel.)
314-842-5957 (fax)
david@cochranengr.com
• Civil Engineering
• Land Surveying
• Architecture
• Site Development
• General Consulting
• Master Planning
CERTIFICATE OF AUTHORITY NUMBER - 006937

Three working days prior to the start of any excavation on this site, contractor shall call 1-800-DIG-RITE for utility location information.

All OSHA rules & regulations established for the safety of construction required by these plans shall be strictly followed (ie. Trenching, Blasting, etc.)

MILLER STREET PHASE 2 IMPROVEMENTS

FEDERAL PROJECT NO. STP-5401(632)

NEW HAVEN, MISSOURI

DATE:	REVISION:	DWN. BY:	DSN. BY:	APPD. BY:

CROSS SECTIONS

DWN. BY: M.R.B. APPD. BY: T.D.T.

DATE: FEBRUARY 2011

SCALE: 1" = 10'

PROJ. NO: SC10-224

DWG. NO: *XS-9*

Drawing name: J:\SC10-221\rc007003.dwg Tab: XS-9 Plotted on: Feb 24, 2011 - 8:12am Plotted by: mspalding

** CONTRACTOR SHALL RELOCATE ALL EXISTING SIGNS, PLANTERS, MAILBOXES, RUN-OFF PIPES AND PRIVATE LIGHTS AS NECESSARY FOR THE CONSTRUCTION OF THE IMPROVEMENTS. NEW LOCATIONS SHALL BE AS DIRECTED BY THE ENGINEER. SEE THE REMOVAL OF IMPROVEMENTS SECTION IN THE SPECIFICATIONS. **

** CONTRACTOR SHALL PAINT CURB YELLOW FOR 10 FEET AT ALL FIRE HYDRANTS. **

PAVEMENT MARKING AND SIGNAGE PLAN

25 0 25 50

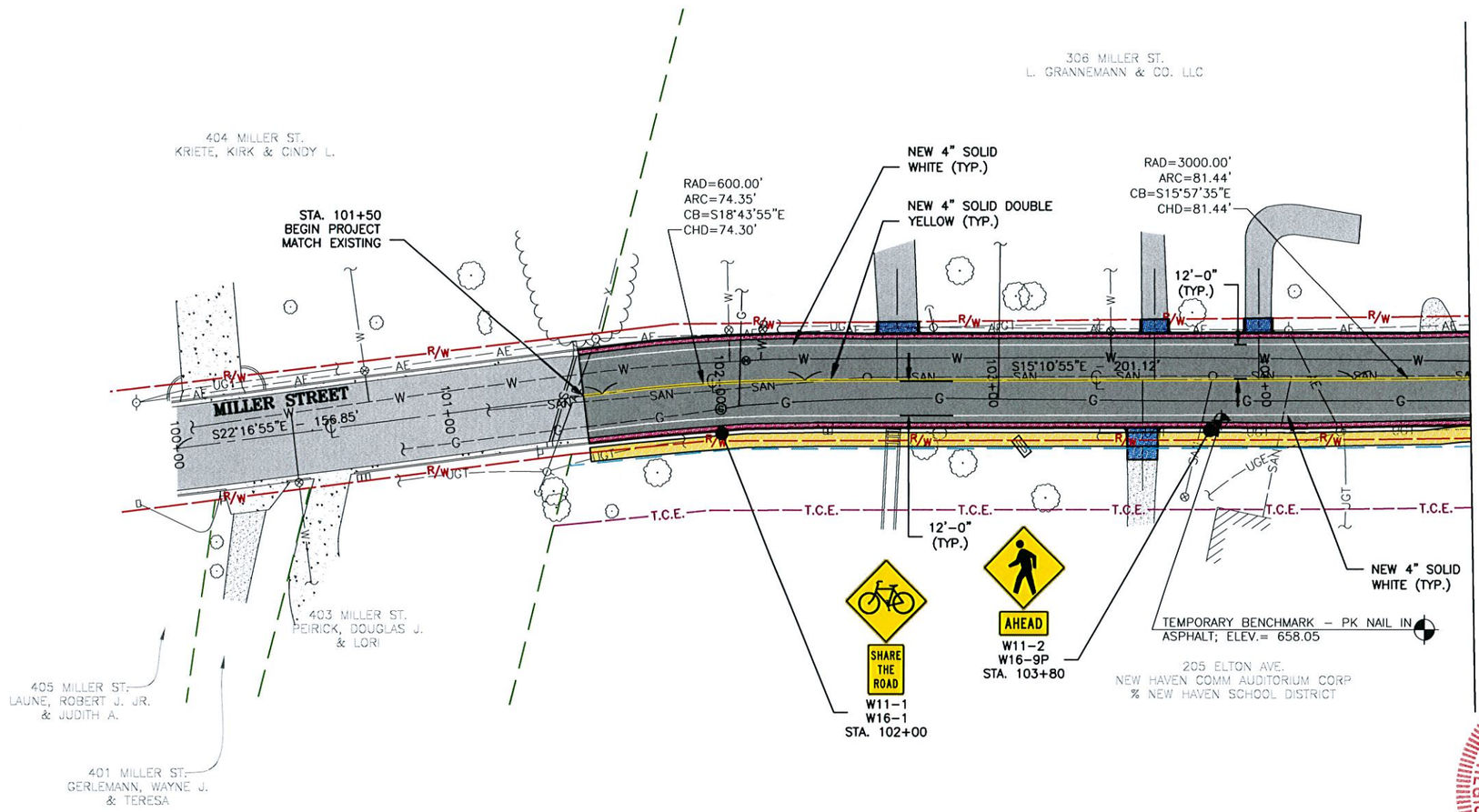

NOTES:

1. UNDERGROUND STRUCTURES, FACILITIES, AND UTILITIES HAVE BEEN PLOTTED FROM AVAILABLE SURVEYS AND RECORDS. THEREFORE, THEIR LOCATIONS MUST BE CONSIDERED APPROXIMATE ONLY. THERE MAY BE OTHERS, THE EXISTENCE OF WHICH IS PRESENTLY NOT KNOWN.
2. TEMPORARY BENCHMARK IS A PK NAIL IN ASPHALT LOCATED ON THE WEST SIDE OF MILLER STREET APPROXIMATELY 250 FEET NORTH OF THE INTERSECTION OF ELTON AVENUE, ELEV.= 658.05. SITE BENCHMARK IS MISSOURI GRS MONUMENT FR-82, ELEV.= 704.72.
3. THE CONTRACTOR IS SPECIFICALLY CAUTIONED THAT THE LOCATION AND/OR ELEVATION OF EXISTING UTILITIES AS SHOWN ON THESE PLANS IS BASED ON RECORDS OF VARIOUS UTILITY COMPANIES AND, WHERE POSSIBLE, MEASUREMENTS TAKEN IN THE FIELD. THE INFORMATION IS NOT TO BE RELIED ON AS BEING EXACT OR COMPLETE. THE CONTRACTOR MUST CALL THE APPROPRIATE UTILITY COMPANY AT LEAST 48 HOURS BEFORE ANY EXCAVATION TO REQUEST EXACT FIELD LOCATION OF UTILITIES. LOCATION, RELOCATION AND CONNECTION OF THE UTILITIES SHALL BE COORDINATED WITH THE UTILITY COMPANIES.
4. TOPOGRAPHIC INFORMATION AS SHOWN HEREON PER FIELD WORK PERFORMED BY T.J.V. & D.P.R. OF COCHRAN, DATED JULY, 2010.
5. THIS DRAWING DOES NOT CONSTITUTE A BOUNDARY SURVEY.
6. THIS PROJECT IS ORIENTED TO GRID NORTH DERIVED FROM GPS OBSERVATIONS OF MISSOURI GRS MONUMENT FR-82 USING MODOT'S RTK GPS NETWORK.
7. THIS SITE LIES WITHIN "ZONE C", AREAS OF MINIMAL FLOODING PER FEMA FLOOD INSURANCE RATE MAP COMMUNITY-PANEL NUMBER 290133 0001A, EFFECTIVE DATE FEBRUARY 18, 1981.

LEGEND

PROPERTY LINE		EXISTING AERIAL ELECTRIC	AE	EXISTING GAS VALVE		NEW ASPHALT PAVEMENT	
EXISTING RIGHT-OF-WAY	R/W	EXISTING SANITARY SEWER	SAN	EXISTING FIRE HYDRANT		NEW CONCRETE PAVEMENT	
CENTERLINE OF ROAD	℄	EXISTING WATER MAIN	W	EXISTING MAILBOX		NEW CONCRETE APPROACH	
EXISTING MAJOR CONTOUR	970	EXISTING GAS MAIN	G	EXISTING SIGN		NEW SIDEWALK	
EXISTING MINOR CONTOUR		EXISTING STORM SEWER	SS	EXISTING FENCE	X	NEW CURB RAMP	
EXISTING BUILDING		EXISTING UNDERGROUND TELEPHONE	UGT	EXISTING LIGHT		NEW CURB AND GUTTER	
EXISTING CONCRETE PAVEMENT		EXISTING FIBER OPTIC	FO	EXISTING BUSH		NEW STORM SEWER	SS
EXISTING GRAVEL		EXISTING WATER VALVE		EXISTING TREE		NEW CURB INLET	
EXISTING ASPHALT PAVEMENT		EXISTING WATER METER	WM	EXISTING TREELINE		NEW WATER MAIN	W
		EXISTING UTILITY POLE		EXISTING UTILITY (TERMINUS UNKNOWN)		NEW GATE VALVE	
		EXISTING GUY WIRE				NEW FIRE HYDRANT	
						NEW GAS MAIN	G
						NEW GAS VALVE	
						TEMPORARY CONSTRUCTION EASEMENT	T.C.E.
						PERMANENT EASEMENT	

STATE OF MISSOURI
TARY TODD
NUMBER
E-24182
REGISTERED PROFESSIONAL ENGINEER
2/24/11

12963 Maurer Industrial Dr. 314-842-4033 (tel.)
Sunset Hills, MO 63127 314-842-5957 (fax)
david@cochraneng.com
COCHRAN
• Civil Engineering
• Land Surveying
• Architecture
• Site Development
• General Consulting
• Master Planning
CERTIFICATE OF AUTHORITY NUMBER - 008937

Three working days prior to the start of any excavation on this site, contractor shall call 1-800-344-7483 for utility location information.

All OSHA rules & regulations established for the type of construction required by these plans shall be strictly followed (ie. Trenching, Shoring, etc.)

MILLER STREET PHASE 2 IMPROVEMENTS
FEDERAL PROJECT NO. STP-5401(632)
NEW HAVEN, MISSOURI

PAVEMENT MARKING AND SIGNAGE PLAN

DATE:	REVISION:	DWN. BY:	APPD. BY:

DWN. BY: M.R.B. APPD. BY: T.D.T.
DATE: FEBRUARY 2011
SCALE: 1" = 50'
PROJ. NO: SC10-224
DWG. NO: PM-1

Drawing name: J:\SC10-221\PAVEMENT MARKING AND SIGNAGE_PH2.dwg Tab: PM-1 Plotted on: Oct 18, 2011 - 10:11am Plotted by: nclark

PAVEMENT MARKING AND SIGNAGE PLAN

** CONTRACTOR SHALL RELOCATE ALL EXISTING SIGNS, PLANTERS, MAILBOXES, RUN-OFF PIPES AND PRIVATE LIGHTS AS NECESSARY FOR THE CONSTRUCTION OF THE IMPROVEMENTS. NEW LOCATIONS SHALL BE AS DIRECTED BY THE ENGINEER. SEE THE REMOVAL OF IMPROVEMENTS SECTION IN THE SPECIFICATIONS. **

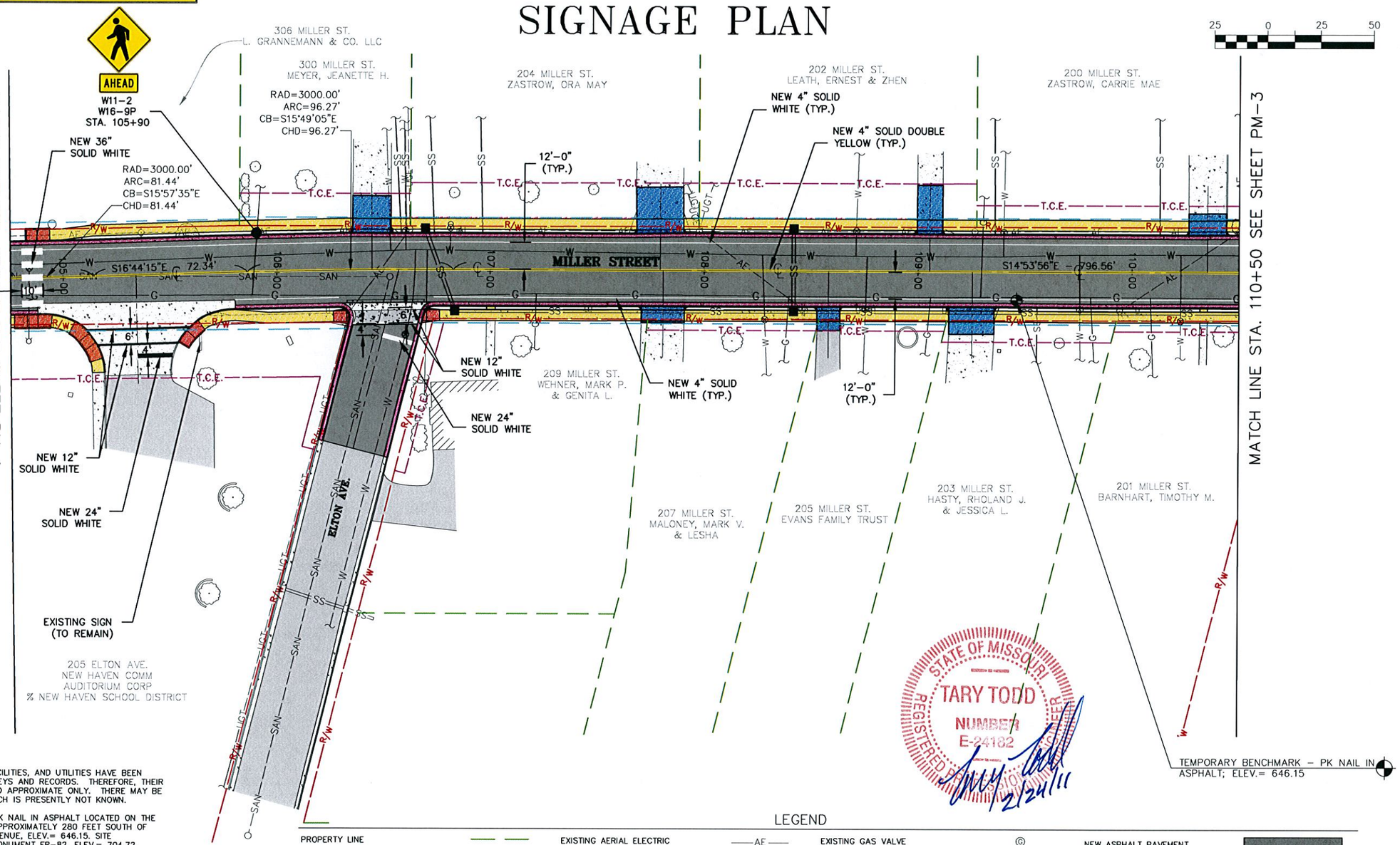

NOTES:

1. UNDERGROUND STRUCTURES, FACILITIES, AND UTILITIES HAVE BEEN PLOTTED FROM AVAILABLE SURVEYS AND RECORDS. THEREFORE, THEIR LOCATIONS MUST BE CONSIDERED APPROXIMATE ONLY. THERE MAY BE OTHERS, THE EXISTENCE OF WHICH IS PRESENTLY NOT KNOWN.
2. TEMPORARY BENCHMARK IS A PK NAIL IN ASPHALT LOCATED ON THE WEST SIDE OF MILLER STREET APPROXIMATELY 280 FEET SOUTH OF THE INTERSECTION OF ELTON AVENUE, ELEV.= 646.15. SITE BENCHMARK IS MISSOURI GRS MONUMENT FR-82, ELEV.= 704.72.
3. THE CONTRACTOR IS SPECIFICALLY CAUTIONED THAT THE LOCATION AND/OR ELEVATION OF EXISTING UTILITIES AS SHOWN ON THESE PLANS IS BASED ON RECORDS OF VARIOUS UTILITY COMPANIES AND, WHERE POSSIBLE, MEASUREMENTS TAKEN IN THE FIELD. THE INFORMATION IS NOT TO BE RELIED ON AS BEING EXACT OR COMPLETE. THE CONTRACTOR MUST CALL THE APPROPRIATE UTILITY COMPANY AT LEAST 48 HOURS BEFORE ANY EXCAVATION TO REQUEST EXACT FIELD LOCATION OF UTILITIES. LOCATION, RELOCATION AND CONNECTION OF THE UTILITIES SHALL BE COORDINATED WITH THE UTILITY COMPANIES.
4. TOPOGRAPHIC INFORMATION AS SHOWN HEREON PER FIELD WORK PERFORMED BY T.J.V. & D.P.R. OF COCHRAN, DATED JULY, 2010.
5. THIS DRAWING DOES NOT CONSTITUTE A BOUNDARY SURVEY.
6. THIS PROJECT IS ORIENTED TO GRID NORTH DERIVED FROM GPS OBSERVATIONS OF MISSOURI GRS MONUMENT FR-82 USING MODOT'S RTK GPS NETWORK.
7. THIS SITE LIES WITHIN "ZONE C", AREAS OF MINIMAL FLOODING PER FEMA FLOOD INSURANCE RATE MAP COMMUNITY-PANEL NUMBER 290133 0001A, EFFECTIVE DATE FEBRUARY 18, 1981.

STATE OF MISSOURI
TARY TODD
NUMBER
E-24182
REGISTERED PROFESSIONAL ENGINEER
2/24/11

LEGEND

PROPERTY LINE		EXISTING AERIAL ELECTRIC	—AE—	EXISTING GAS VALVE		NEW ASPHALT PAVEMENT	
EXISTING RIGHT-OF-WAY	—R/W—	EXISTING SANITARY SEWER	—SAN—	EXISTING FIRE HYDRANT		NEW CONCRETE PAVEMENT	
CENTERLINE OF ROAD	—℄—	EXISTING WATER MAIN	—W—	EXISTING MAILBOX		NEW CONCRETE APPROACH	
EXISTING MAJOR CONTOUR	—970—	EXISTING GAS MAIN	—G—	EXISTING SIGN		NEW SIDEWALK	
EXISTING MINOR CONTOUR		EXISTING STORM SEWER	—SS—	EXISTING FENCE	—X—	NEW CURB RAMP	
EXISTING BUILDING		EXISTING UNDERGROUND TELEPHONE	—UGT—	EXISTING LIGHT		NEW CURB AND GUTTER	
		EXISTING FIBER OPTIC	—FO—	EXISTING BUSH		NEW STORM SEWER	—SS—
EXISTING CONCRETE PAVEMENT		EXISTING WATER VALVE		EXISTING TREE		NEW CURB INLET	
EXISTING GRAVEL		EXISTING WATER METER	WM	EXISTING TREELINE		NEW WATER MAIN	—W—
EXISTING ASPHALT PAVEMENT		EXISTING UTILITY POLE		EXISTING UTILITY (TERMINUS UNKNOWN)		NEW GATE VALVE	
		EXISTING GUY WIRE				NEW FIRE HYDRANT	
						NEW GAS MAIN	—G—
						NEW GAS VALVE	
						TEMPORARY CONSTRUCTION EASEMENT	—T.C.E.—
						PERMANENT EASEMENT	

COCHRAN
12863 Maurer Industrial Dr.
Sunset Hills, MO 63127
314-842-4033 (tel.)
314-842-5953 (fax)
david@cochranengineering.com
• Civil Engineering
• Land Surveying
• Architecture
• Site Development
• General Consulting
• Master Planning
CERTIFICATE OF AUTHORITY NUMBER - 006937

Three working days prior to the start of any excavation on this site, contractor shall call 1-800-344-7483 for utility location information.

All OSHA rules & regulations established for the type of construction required by these plans shall be strictly followed (ie. Trenching, Blasting, etc.)

MILLER STREET PHASE 2 IMPROVEMENTS
FEDERAL PROJECT NO. STP-5401(632)
NEW HAVEN, MISSOURI

PAVEMENT MARKING AND SIGNAGE PLAN

DATE:	REVISION:	DWN. BY:	APPD. BY:

DWN. BY: M.R.B. APPD. BY: T.D.T.
DATE: FEBRUARY 2011
SCALE: 1" = 50'
PROJ. NO: SC10-224
DWG. NO: PM-2

Drawing name: J:\SC10-221\PAVEMENT MARKING AND SIGNAGE_PH2.dwg Tab: PM-2 Plotted on: Feb 24, 2011 - 8:12am Plotted by: mspalding

** CONTRACTOR SHALL RELOCATE ALL EXISTING SIGNS, PLANTERS, MAILBOXES, RUN-OFF PIPES AND PRIVATE LIGHTS AS NECESSARY FOR THE CONSTRUCTION OF THE IMPROVEMENTS. NEW LOCATIONS SHALL BE AS DIRECTED BY THE ENGINEER. SEE THE REMOVAL OF IMPROVEMENTS SECTION IN THE SPECIFICATIONS. **

** CONTRACTOR SHALL PAINT CURB YELLOW FOR 10 FEET AT ALL FIRE HYDRANTS. **

PAVEMENT MARKING AND SIGNAGE PLAN

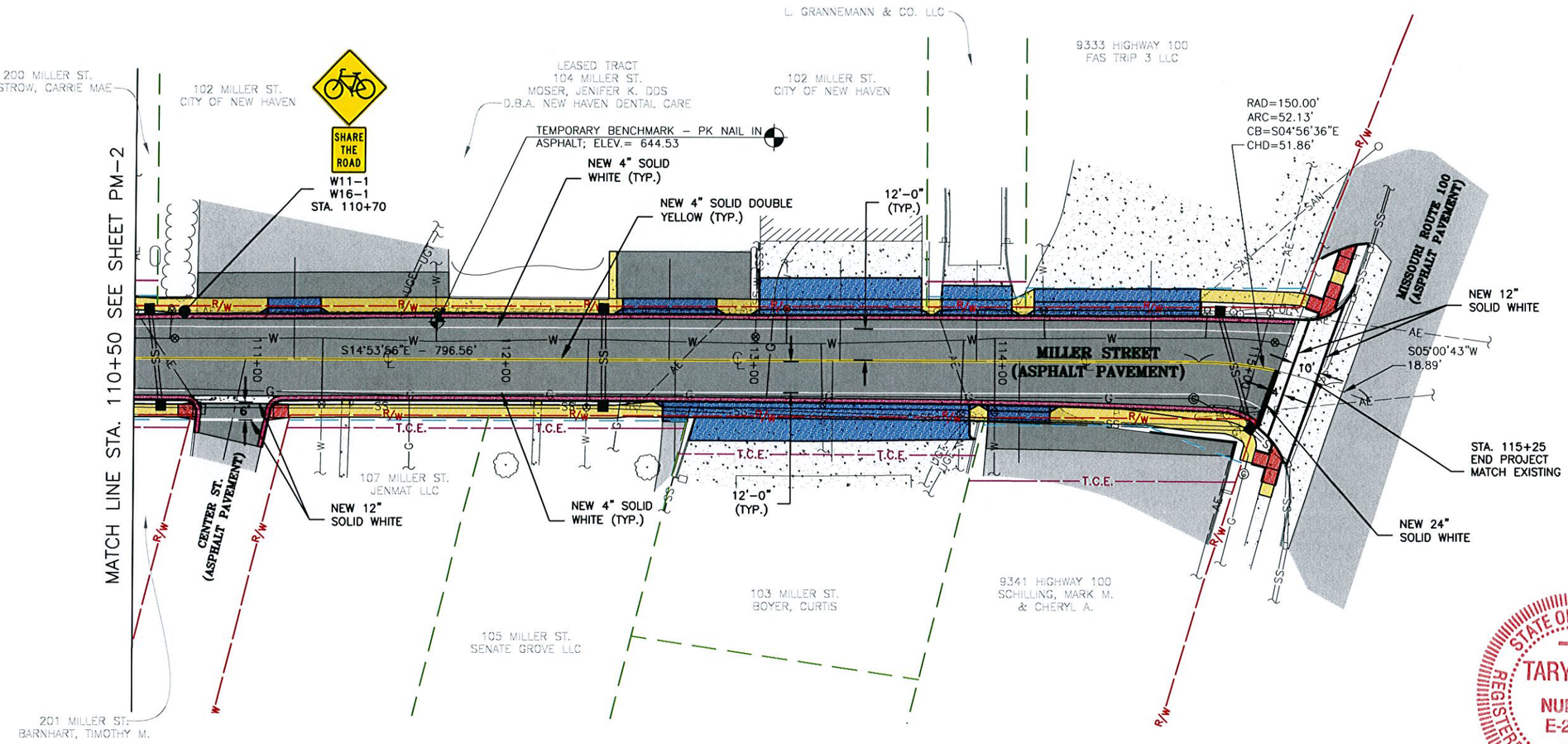

NOTES:

1. UNDERGROUND STRUCTURES, FACILITIES, AND UTILITIES HAVE BEEN PLOTTED FROM AVAILABLE SURVEYS AND RECORDS. THEREFORE, THEIR LOCATIONS MUST BE CONSIDERED APPROXIMATE ONLY. THERE MAY BE OTHERS, THE EXISTENCE OF WHICH IS PRESENTLY NOT KNOWN.
2. TEMPORARY BENCHMARK IS A PK NAIL IN ASPHALT LOCATED ON THE EAST SIDE OF MILLER STREET APPROXIMATELY 365 FEET NORTH OF THE INTERSECTION OF HIGHWAY 100, ELEV.= 644.53. SITE BENCHMARK IS MISSOURI GRS MONUMENT FR-82, ELEV.= 704.72.
3. THE CONTRACTOR IS SPECIFICALLY CAUTIONED THAT THE LOCATION AND/OR ELEVATION OF EXISTING UTILITIES AS SHOWN ON THESE PLANS IS BASED ON RECORDS OF VARIOUS UTILITY COMPANIES AND, WHERE POSSIBLE, MEASUREMENTS TAKEN IN THE FIELD. THE INFORMATION IS NOT TO BE RELIED ON AS BEING EXACT OR COMPLETE. THE CONTRACTOR MUST CALL THE APPROPRIATE UTILITY COMPANY AT LEAST 48 HOURS BEFORE ANY EXCAVATION TO REQUEST EXACT FIELD LOCATION OF UTILITIES. LOCATION, RELOCATION AND CONNECTION OF THE UTILITIES SHALL BE COORDINATED WITH THE UTILITY COMPANIES.
4. TOPOGRAPHIC INFORMATION AS SHOWN HEREON PER FIELD WORK PERFORMED BY T.J.V. & D.P.R. OF COCHRAN, DATED JULY, 2010.
5. THIS DRAWING DOES NOT CONSTITUTE A BOUNDARY SURVEY.
6. THIS PROJECT IS ORIENTED TO GRID NORTH DERIVED FROM GPS OBSERVATIONS OF MISSOURI GRS MONUMENT FR-82 USING MODOT'S RTK GPS NETWORK.
7. THIS SITE LIES WITHIN "ZONE C", AREAS OF MINIMAL FLOODING PER FEMA FLOOD INSURANCE RATE MAP COMMUNITY-PANEL NUMBER 290133 0001A, EFFECTIVE DATE FEBRUARY 18, 1981.

LEGEND

PROPERTY LINE		EXISTING AERIAL ELECTRIC	AE	EXISTING GAS VALVE		NEW ASPHALT PAVEMENT	
EXISTING RIGHT-OF-WAY	R/W	EXISTING SANITARY SEWER	SAN	EXISTING FIRE HYDRANT		NEW CONCRETE PAVEMENT	
CENTERLINE OF ROAD	℄	EXISTING WATER MAIN	W	EXISTING MAILBOX		NEW CONCRETE APPROACH	
EXISTING MAJOR CONTOUR	970	EXISTING GAS MAIN	G	EXISTING SIGN		NEW SIDEWALK	
EXISTING MINOR CONTOUR		EXISTING STORM SEWER	SS	EXISTING FENCE	X	NEW CURB RAMP	
EXISTING BUILDING		EXISTING UNDERGROUND TELEPHONE	UGT	EXISTING LIGHT		NEW CURB AND GUTTER	
EXISTING CONCRETE PAVEMENT		EXISTING FIBER OPTIC	FO	EXISTING BUSH		NEW STORM SEWER	SS
EXISTING GRAVEL		EXISTING WATER VALVE		EXISTING TREE		NEW CURB INLET	
EXISTING ASPHALT PAVEMENT		EXISTING WATER METER	WM	EXISTING TREELINE		NEW WATER MAIN	W
		EXISTING UTILITY POLE		EXISTING UTILITY (TERMINUS UNKNOWN)		NEW GATE VALVE	
		EXISTING GUY WIRE				NEW FIRE HYDRANT	
						NEW GAS MAIN	G
						NEW GAS VALVE	
						TEMPORARY CONSTRUCTION EASEMENT	T.C.E.
						PERMANENT EASEMENT	

STATE OF MISSOURI
TARY TODD
NUMBER
E-24182
REGISTERED PROFESSIONAL ENGINEER
2/24/11

12963 Maurer Industrial Dr. 314-842-4033 (tel.)
Sunset Hills, MO 63127 314-842-5037 (fax)
david@cochranengineering.com
COCHRAN
• Civil Engineering
• Land Surveying
• Architecture
• Site Development
• General Consulting
• Master Planning
CERTIFICATE OF AUTHORITY NUMBER - 006937

Three working days prior to the start of any excavation on this site, contractor shall call the appropriate for utility location information.

All OSHA rules & regulations established for the type of construction required by these plans shall be strictly followed (ie. Trenching, Blasting, etc.)

MILLER STREET PHASE 2 IMPROVEMENTS
FEDERAL PROJECT NO. STP-5401(632)
NEW HAVEN, MISSOURI

DATE:	REVISION:	DWN. BY:	APPD. BY:

PAVEMENT MARKING AND SIGNAGE PLAN

DWN. BY: M.R.B. APPD. BY: T.D.T.
DATE: FEBRUARY 2011
SCALE: 1" = 50'
PROJ. NO: SC10-224
DWG. NO: PM-3

Drawing name: J:\SC10-221\PAVEMENT MARKING AND SIGNAGE_PH2.dwg Tab: PM-3 Plotted on: Oct 18, 2011 - 10:11am Plotted by: nclark

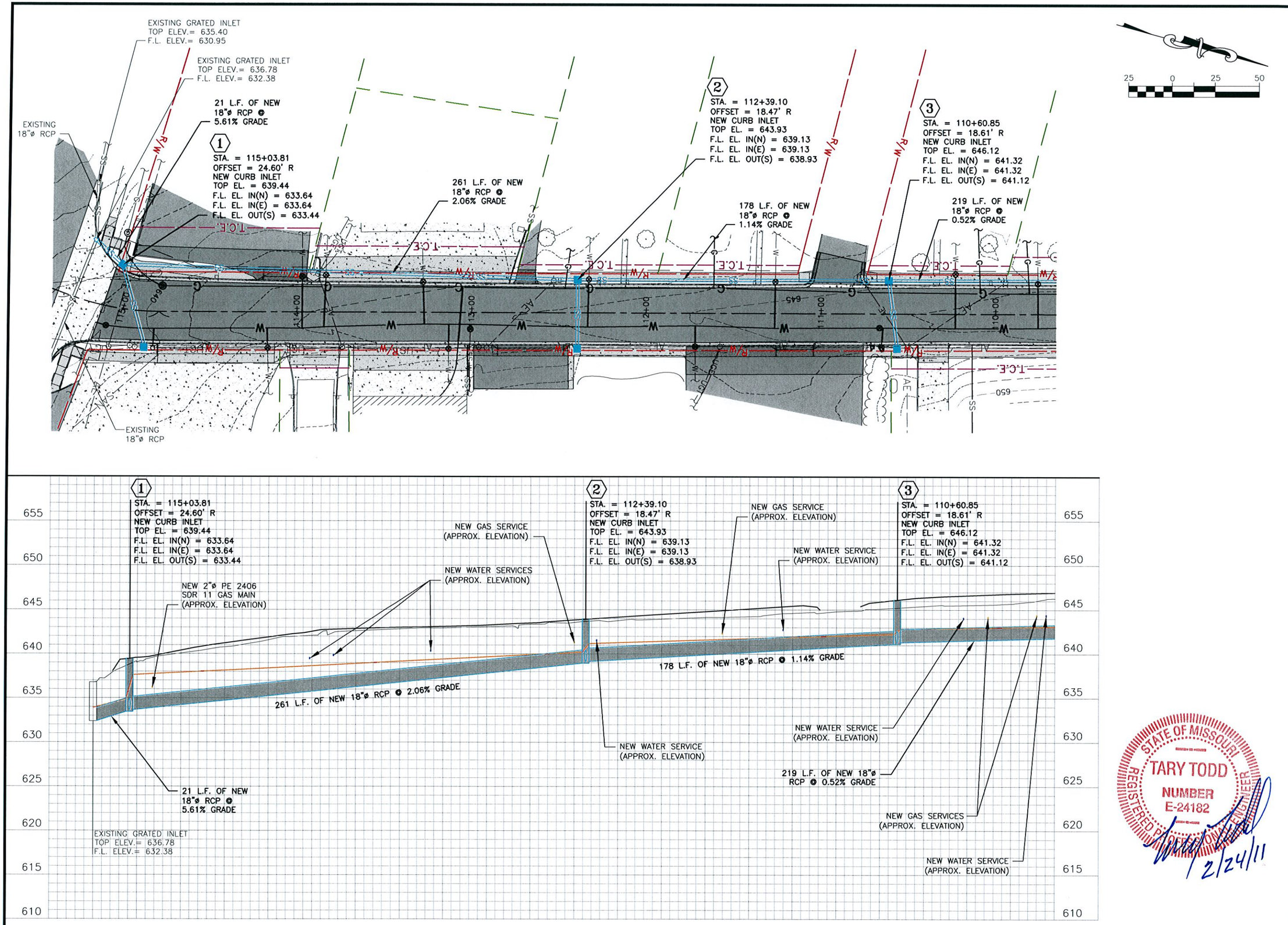

STATE OF MISSOURI
TARY TODD
NUMBER
E-24182
REGISTERED PROFESSIONAL ENGINEER
2/24/11

COCHRAN
12963 Maurer Industrial Dr.
Sunset Hills, MO 63127
314-842-4033 (tel.)
314-842-5957 (fax)
david@cochraneng.com
• Civil Engineering
• Land Surveying
• Architecture
• Site Development
• General Consulting
• Master Planning
CERTIFICATE OF AUTHORITY NUMBER - 006937

Three working days prior to the start of excavation on this site, contractor shall call 1-800-DIG-RITE for utility location information.

All OSHA rules & regulations established for the type of construction covered by these plans shall be strictly followed (ie. Trenching, Blasting, etc.)

MILLER STREET PHASE 2 IMPROVEMENTS
FEDERAL PROJECT NO. STP-5401(632)
NEW HAVEN, MISSOURI

DATE:	
REVISION:	
DWN. BY:	
APPD. BY:	
DWN. BY:	M.R.B.
APPD. BY:	T.D.T.
DATE:	FEBRUARY 2011
HORIZONTAL SCALE:	1" = 50'
VERTICAL SCALE:	1" = 10'
PROJ. NO:	SC10-224
DWG. NO:	ST-1

STORM SEWER PLAN AND PROFILE

Drawing name: J:\SC10-221\ST010102.dwg Tab: ST-1 Plotted on: Oct 18, 2011 - 9:59am Plotted by: nclark

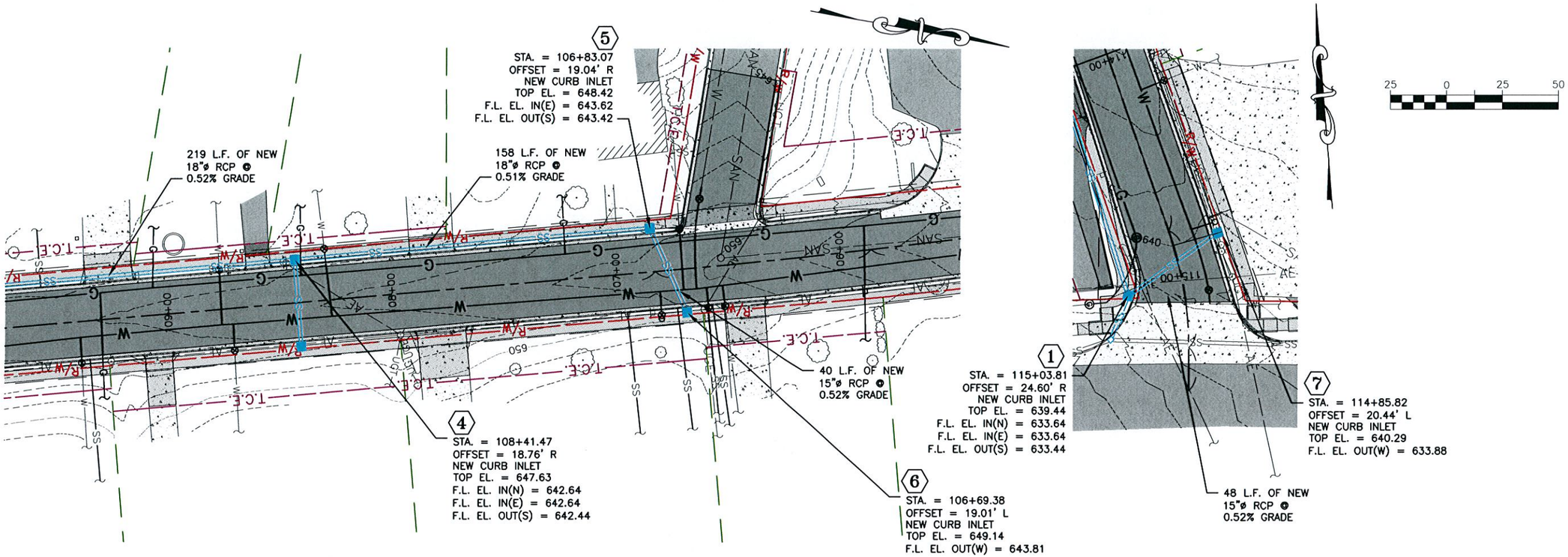

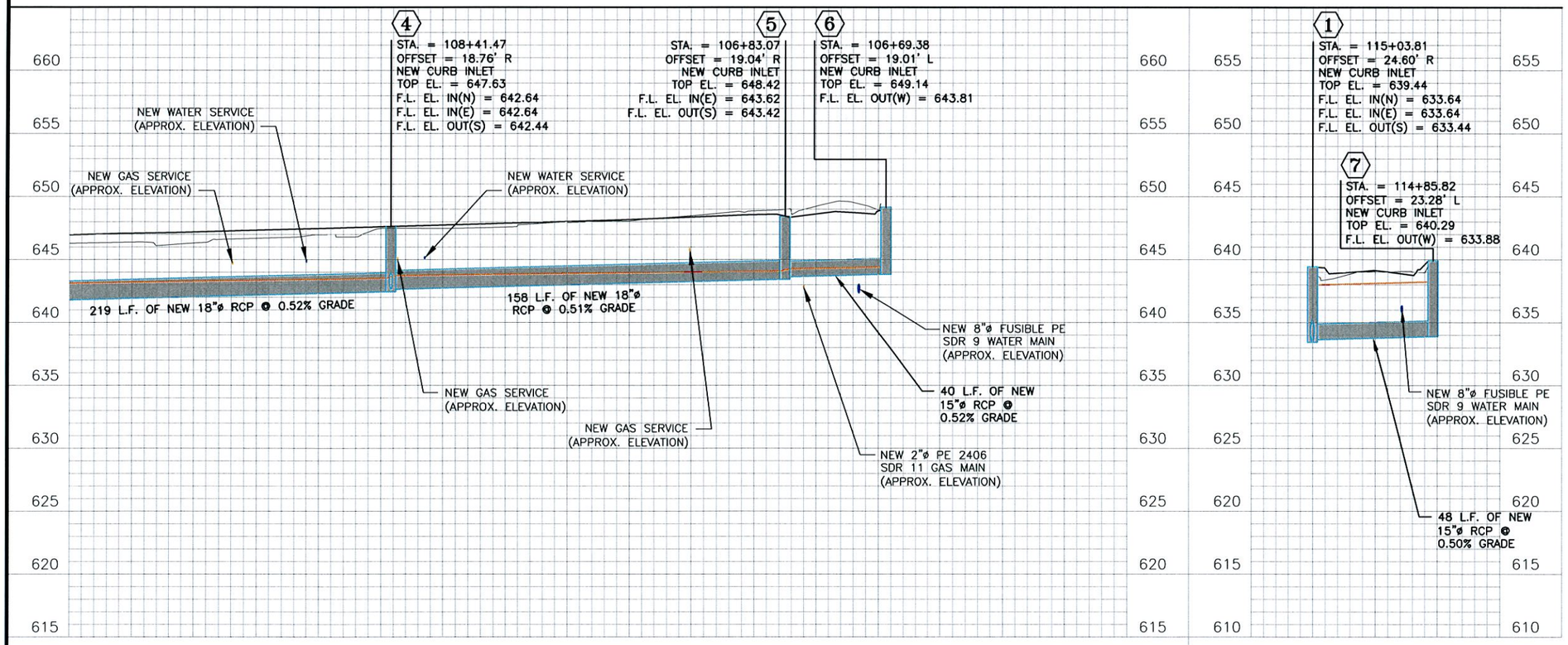

STATE OF MISSOURI
TARY TODD
NUMBER
E-24182
REGISTERED PROFESSIONAL ENGINEER
2/24/11

12963 Maurer Industrial Dr. 314-842-4033 (tel.)
Sunset Hills, MO 63127 314-842-5957 (fax)
davidl@cochranengineering.com
COCHRAN
• Civil Engineering
• Land Surveying
• Architecture
• Site Development
• General Consulting
• Master Planning
CERTIFICATE OF AUTHORITY NUMBER - 006937

Three working days prior to the start of any excavation on this site, contractor shall call Missouri One Call for utility location information.

All OSHA rules & regulations established for the type of construction required by these plans shall be strictly followed (ie. Trenching, Blasting, etc.)

MILLER STREET PHASE 2 IMPROVEMENTS

FEDERAL PROJECT NO. STP-5401(632)

NEW HAVEN, MISSOURI

STORM SEWER PLAN AND PROFILE

DATE:	REVISION:	DWN. BY:	APP'D. BY:

DWN. BY: M.R.B. APP'D. BY: T.D.T.

DATE: FEBRUARY 2011

HORIZONTAL SCALE: 1" = 50'

VERTICAL SCALE: 1" = 10'

PROJ. NO: SC10-224

DWG. NO: ST-2

Drawing name: J:\SC10-221\ST010202.dwg Tab: ST-2 Plotted on: Oct 18, 2011 - 10:36am Plotted by: nclark

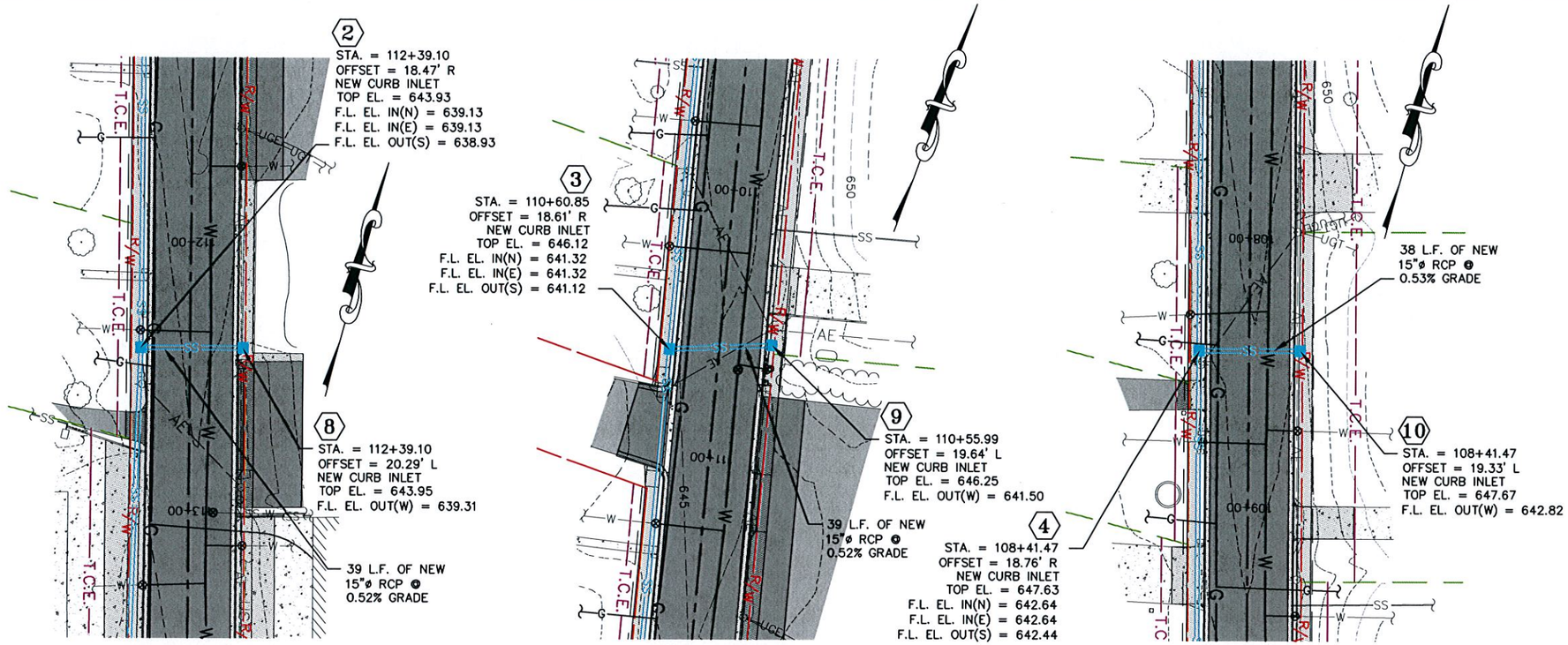

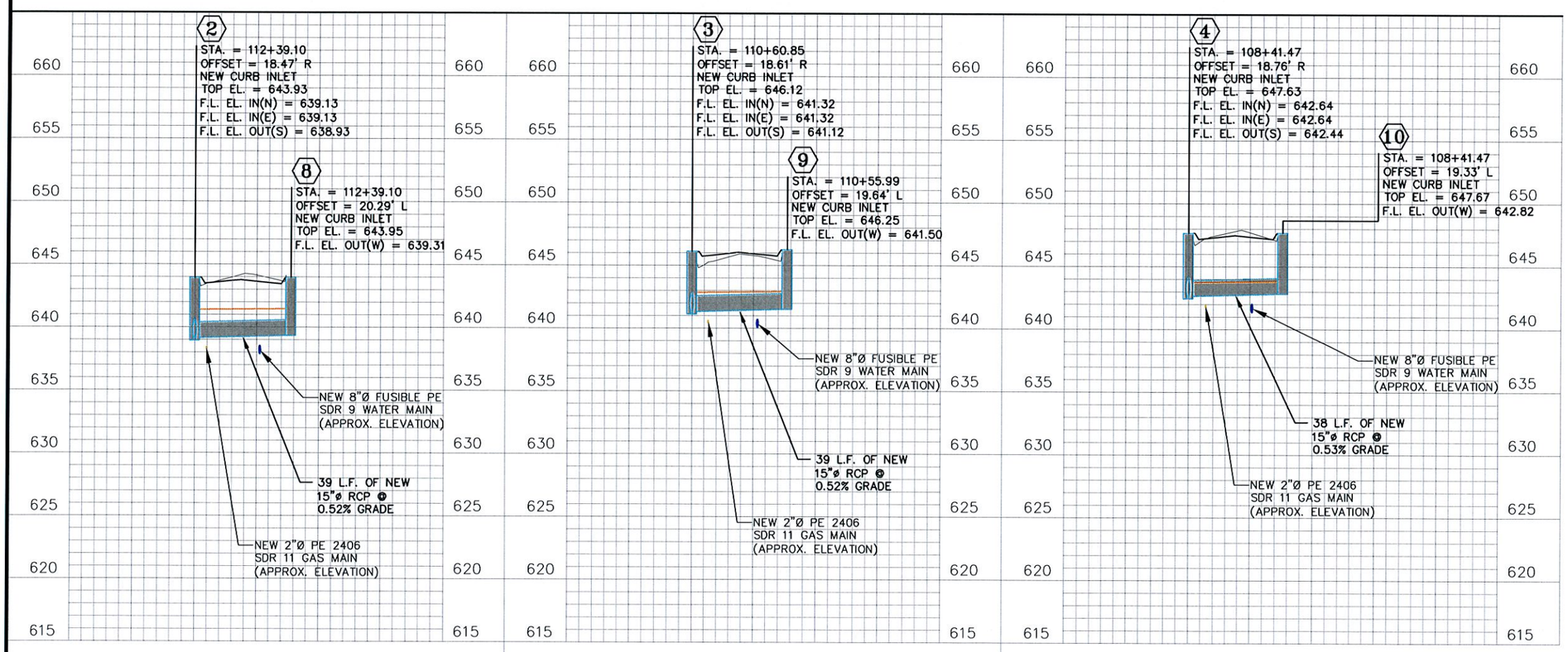

12963 Maurer Industrial Dr.
Sunset Hills, MO 63127
314-842-4033 (tel.)
314-842-5957 (fax)
dovle@cochranengineering.com
COCHRAN
• Civil Engineering
• Land Surveying
• Architecture
• Site Development
• General Consulting
• Master Planning
CERTIFICATE OF AUTHORITY NUMBER - 006937

Three working days prior to the start of any excavation on this site, contractor shall call Missouri One Call for utility location information.

All OSHA rules & regulations established for the type of construction required by these plans shall be strictly followed (ie. Trenching, Blasting, etc.)

MILLER STREET PHASE 2 IMPROVEMENTS

FEDERAL PROJECT NO. STP-5401(632)

NEW HAVEN, MISSOURI

STATE OF MISSOURI
TARY TODD
NUMBER
E-24182
REGISTERED PROFESSIONAL ENGINEER
2/24/11

DWN. BY:	M.R.B.
APPD. BY:	T.D.T.
DATE:	FEBRUARY 2011
HORIZONTAL SCALE:	1" = 50'
VERTICAL SCALE:	1" = 10'
PROJ. NO:	SC10-224
DWG. NO:	ST-3

DATE: REVISION: DWN. BY: APPD. BY:

STORM SEWER PLAN AND PROFILE

Drawing name: J:\SC10-221\ST030102.dwg Tab: ST-3 Plotted on: Feb 24, 2011 - 8:13am Plotted by: mspalding

UTILITY PLAN

** CONTRACTOR SHALL RELOCATE ALL EXISTING SIGNS, PLANTERS, MAILBOXES, RUN-OFF PIPES AND PRIVATE LIGHTS AS NECESSARY FOR THE CONSTRUCTION OF THE IMPROVEMENTS. NEW LOCATIONS SHALL BE AS DIRECTED BY THE ENGINEER. SEE THE REMOVAL OF IMPROVEMENTS SECTION IN THE SPECIFICATIONS. **

** CONTRACTOR SHALL ADJUST TO GRADE ALL UTILITIES NECESSARY TO BRING THE UTILITY TO THE GRADE OF THE NEW PAVEMENT. SEE THE UTILITY ADJUSTMENT SECTION OF THE SPECIFICATIONS. **

** CONTRACTOR SHALL PRESERVE ALL SEWER LATERALS. ANY DAMAGE SHALL BE REPAIRED BY CITY APPROVED METHOD. ** (INCIDENTAL TO CONSTRUCTION)

25 0 25 50

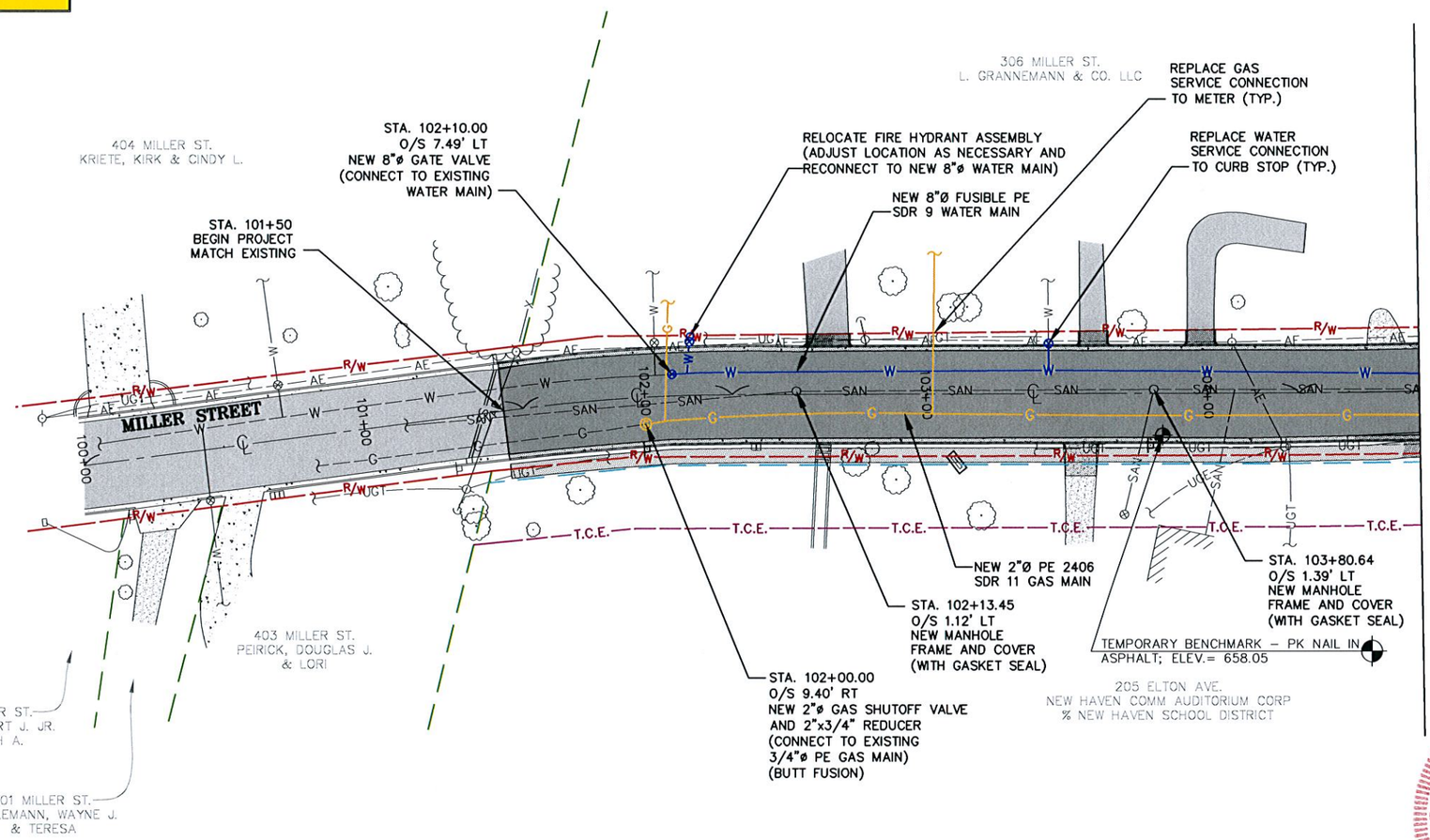

NOTES:

1. UNDERGROUND STRUCTURES, FACILITIES, AND UTILITIES HAVE BEEN PLOTTED FROM AVAILABLE SURVEYS AND RECORDS. THEREFORE, THEIR LOCATIONS MUST BE CONSIDERED APPROXIMATE ONLY. THERE MAY BE OTHERS, THE EXISTENCE OF WHICH IS PRESENTLY NOT KNOWN.
2. TEMPORARY BENCHMARK IS A PK NAIL IN ASPHALT LOCATED ON THE WEST SIDE OF MILLER STREET APPROXIMATELY 250 FEET NORTH OF THE INTERSECTION OF ELTON AVENUE, ELEV.= 658.05. SITE BENCHMARK IS MISSOURI GRS MONUMENT FR-82, ELEV.= 704.72.
3. THE CONTRACTOR IS SPECIFICALLY CAUTIONED THAT THE LOCATION AND/OR ELEVATION OF EXISTING UTILITIES AS SHOWN ON THESE PLANS IS BASED ON RECORDS OF VARIOUS UTILITY COMPANIES AND, WHERE POSSIBLE, MEASUREMENTS TAKEN IN THE FIELD. THE INFORMATION IS NOT TO BE RELIED ON AS BEING EXACT OR COMPLETE. THE CONTRACTOR MUST CALL THE APPROPRIATE UTILITY COMPANY AT LEAST 48 HOURS BEFORE ANY EXCAVATION TO REQUEST EXACT FIELD LOCATION OF UTILITIES. LOCATION, RELOCATION AND CONNECTION OF THE UTILITIES SHALL BE COORDINATED WITH THE UTILITY COMPANIES.
4. TOPOGRAPHIC INFORMATION AS SHOWN HEREON PER FIELD WORK PERFORMED BY T.J.V. & D.P.R. OF COCHRAN, DATED JULY, 2010.
5. THIS DRAWING DOES NOT CONSTITUTE A BOUNDARY SURVEY.
6. THIS PROJECT IS ORIENTED TO GRID NORTH DERIVED FROM GPS OBSERVATIONS OF MISSOURI GRS MONUMENT FR-82 USING MODOT'S RTK GPS NETWORK.
7. THIS SITE LIES WITHIN "ZONE C", AREAS OF MINIMAL FLOODING PER FEMA FLOOD INSURANCE RATE MAP COMMUNITY-PANEL NUMBER 290133 0001A, EFFECTIVE DATE FEBRUARY 18, 1981.

LEGEND

PROPERTY LINE		EXISTING AERIAL ELECTRIC	AE	EXISTING GAS VALVE		NEW ASPHALT PAVEMENT	
EXISTING RIGHT-OF-WAY	R/W	EXISTING SANITARY SEWER	SAN	EXISTING FIRE HYDRANT		NEW CONCRETE PAVEMENT	
CENTERLINE OF ROAD	℄	EXISTING WATER MAIN	W	EXISTING MAILBOX		NEW CONCRETE APPROACH	
EXISTING MAJOR CONTOUR	970	EXISTING GAS MAIN	G	EXISTING SIGN		NEW SIDEWALK	
EXISTING MINOR CONTOUR		EXISTING STORM SEWER	SS	EXISTING FENCE	X	NEW CURB RAMP	
EXISTING BUILDING		EXISTING UNDERGROUND TELEPHONE	UGT	EXISTING LIGHT		NEW CURB AND GUTTER	
EXISTING CONCRETE PAVEMENT		EXISTING FIBER OPTIC	FO	EXISTING BUSH		NEW STORM SEWER	SS
EXISTING GRAVEL		EXISTING WATER VALVE		EXISTING TREE		NEW CURB INLET	
EXISTING ASPHALT PAVEMENT		EXISTING WATER METER	WM	EXISTING TREELINE		NEW WATER MAIN	W
		EXISTING UTILITY POLE		EXISTING UTILITY (TERMINUS UNKNOWN)		NEW GATE VALVE	
		EXISTING GUY WIRE				NEW FIRE HYDRANT	
						NEW GAS MAIN	G
						NEW GAS VALVE	G
						TEMPORARY CONSTRUCTION EASEMENT	T.C.E.
						PERMANENT EASEMENT	

STATE OF MISSOURI
TARY TODD
NUMBER
E-24182
REGISTERED PROFESSIONAL ENGINEER
2/24/11

12963 Maurer Industrial Dr.
Sunset Hills, MO 63127
314-842-4033 (tel.)
314-842-5957 (fax)
david@cochraneng.com
COCHRAN
• Civil Engineering
• Land Surveying
• Architecture
• Site Development
• General Consulting
• Master Planning
CERTIFICATE OF AUTHORITY NUMBER - 006937

Three working days prior to the start of any excavation within the project, shall call 1-800-DIG-RITE for utility location information.

All OSHA rules & regulations established for the type of construction required by these contract documents, followed (i.e. Trenching, Blasting, etc.)

MILLER STREET PHASE 2 IMPROVEMENTS
FEDERAL PROJECT NO. STP-5401(632)
NEW HAVEN, MISSOURI

DATE:	REVISION:	DWN. BY:	APPD. BY:

DWN. BY: M.R.B. APPD. BY: T.D.T.
DATE: FEBRUARY 2011
SCALE: 1" = 50'
PROJ. NO: SC10-224
DWG. NO: U-1

UTILITY PLAN

Drawing name: J:\SC10-221\UTILITY_PH2.dwg Tab: U-1 Plotted on: Oct 20, 2011 - 8:27am Plotted by: nclark

UTILITY PLAN

** CONTRACTOR SHALL RELOCATE ALL EXISTING SIGNS, PLANTERS, MAILBOXES, RUN-OFF PIPES AND PRIVATE LIGHTS AS NECESSARY FOR THE CONSTRUCTION OF THE IMPROVEMENTS. NEW LOCATIONS SHALL BE AS DIRECTED BY THE ENGINEER. SEE THE REMOVAL OF IMPROVEMENTS SECTION IN THE SPECIFICATIONS. **

** CONTRACTOR SHALL ADJUST TO GRADE ALL UTILITIES NECESSARY TO BRING THE UTILITY TO THE GRADE OF THE NEW PAVEMENT. SEE THE UTILITY ADJUSTMENT SECTION OF THE SPECIFICATIONS. **

** CONTRACTOR SHALL PRESERVE ALL SEWER LATERALS. ANY DAMAGE SHALL BE REPAIRED BY CITY APPROVED METHOD. ** (INCIDENTAL TO CONSTRUCTION)

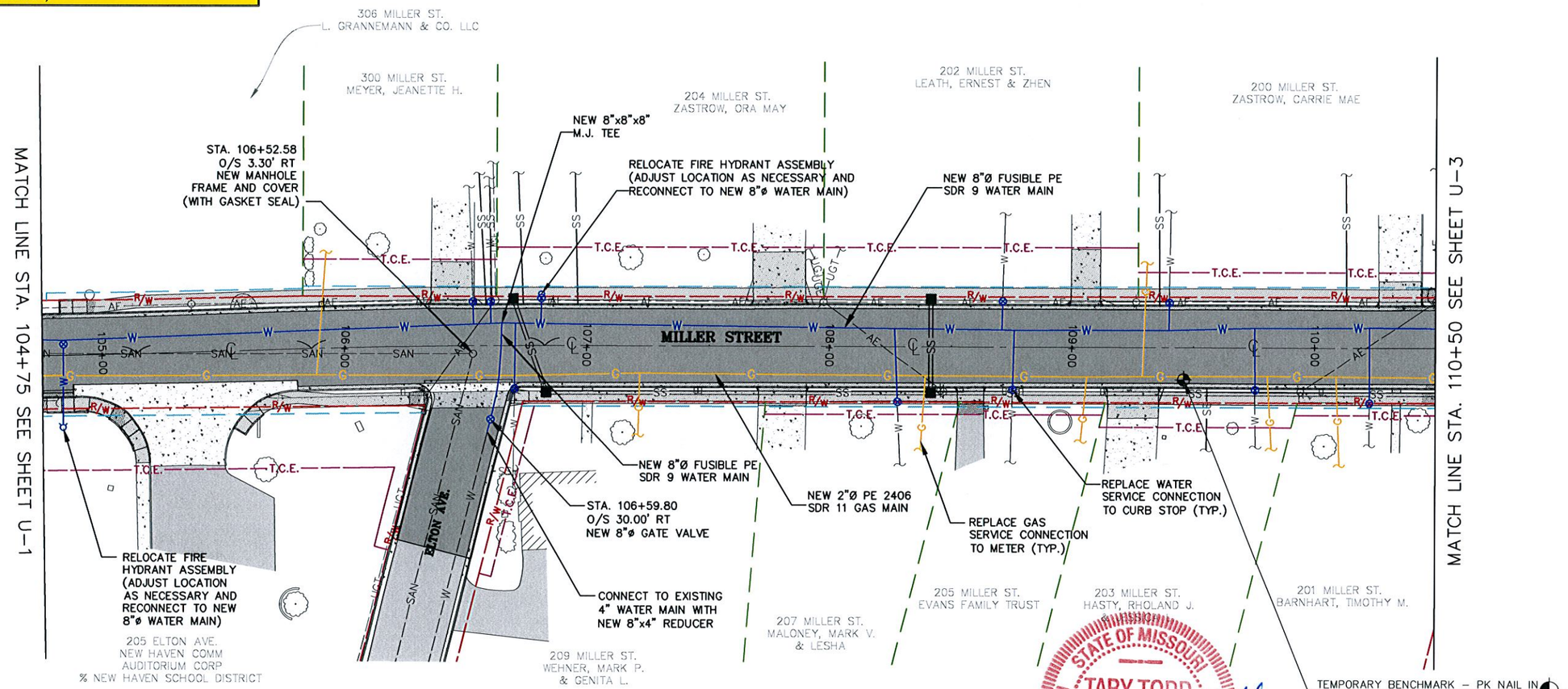

STATE OF MISSOURI
TARY TODD
NUMBER
E-24182
REGISTERED PROFESSIONAL ENGINEER
2/24/11

NOTES:

1. UNDERGROUND STRUCTURES, FACILITIES, AND UTILITIES HAVE BEEN PLOTTED FROM AVAILABLE SURVEYS AND RECORDS. THEREFORE, THEIR LOCATIONS MUST BE CONSIDERED APPROXIMATE ONLY. THERE MAY BE OTHERS, THE EXISTENCE OF WHICH IS PRESENTLY NOT KNOWN.
2. TEMPORARY BENCHMARK IS A PK NAIL IN ASPHALT LOCATED ON THE WEST SIDE OF MILLER STREET APPROXIMATELY 280 FEET SOUTH OF THE INTERSECTION OF ELTON AVENUE, ELEV.= 646.15. SITE BENCHMARK IS MISSOURI GRS MONUMENT FR-82, ELEV.= 704.72.
3. THE CONTRACTOR IS SPECIFICALLY CAUTIONED THAT THE LOCATION AND/OR ELEVATION OF EXISTING UTILITIES AS SHOWN ON THESE PLANS IS BASED ON RECORDS OF VARIOUS UTILITY COMPANIES AND, WHERE POSSIBLE, MEASUREMENTS TAKEN IN THE FIELD. THE INFORMATION IS NOT TO BE RELIED ON AS BEING EXACT OR COMPLETE. THE CONTRACTOR MUST CALL THE APPROPRIATE UTILITY COMPANY AT LEAST 48 HOURS BEFORE ANY EXCAVATION TO REQUEST EXACT FIELD LOCATION OF UTILITIES. LOCATION, RELOCATION AND CONNECTION OF THE UTILITIES SHALL BE COORDINATED WITH THE UTILITY COMPANIES.
4. TOPOGRAPHIC INFORMATION AS SHOWN HEREON PER FIELD WORK PERFORMED BY T.J.V. & D.P.R. OF COCHRAN, DATED JULY, 2010.
5. THIS DRAWING DOES NOT CONSTITUTE A BOUNDARY SURVEY.
6. THIS PROJECT IS ORIENTED TO GRID NORTH DERIVED FROM GPS OBSERVATIONS OF MISSOURI GRS MONUMENT FR-82 USING MODOT'S RTK GPS NETWORK.
7. THIS SITE LIES WITHIN "ZONE C", AREAS OF MINIMAL FLOODING PER FEMA FLOOD INSURANCE RATE MAP COMMUNITY-PANEL NUMBER 290133 0001A, EFFECTIVE DATE FEBRUARY 18, 1981.

LEGEND

PROPERTY LINE		EXISTING AERIAL ELECTRIC	—AE—	EXISTING GAS VALVE		NEW ASPHALT PAVEMENT	
EXISTING RIGHT-OF-WAY	—R/W—	EXISTING SANITARY SEWER	—SAN—	EXISTING FIRE HYDRANT		NEW CONCRETE PAVEMENT	
CENTERLINE OF ROAD	—℄—	EXISTING WATER MAIN	—W—	EXISTING MAILBOX		NEW CONCRETE APPROACH	
EXISTING MAJOR CONTOUR	—970—	EXISTING GAS MAIN	—G—	EXISTING SIGN		NEW SIDEWALK	
EXISTING MINOR CONTOUR		EXISTING STORM SEWER	—SS—	EXISTING FENCE	—X—	NEW CURB RAMP	
EXISTING BUILDING		EXISTING UNDERGROUND TELEPHONE	—UGT—	EXISTING LIGHT		NEW CURB AND GUTTER	
		EXISTING FIBER OPTIC	—FO—	EXISTING BUSH		NEW STORM SEWER	—SS—
EXISTING CONCRETE PAVEMENT		EXISTING WATER VALVE		EXISTING TREE		NEW CURB INLET	
EXISTING GRAVEL		EXISTING WATER METER	WM	EXISTING TREELINE		NEW WATER MAIN	—W—
EXISTING ASPHALT PAVEMENT		EXISTING UTILITY POLE		EXISTING UTILITY (TERMINUS UNKNOWN)		NEW GATE VALVE	
		EXISTING GUY WIRE				NEW FIRE HYDRANT	
						NEW GAS MAIN	—G—
						NEW GAS VALVE	
						TEMPORARY CONSTRUCTION EASEMENT	—T.C.E.—
						PERMANENT EASEMENT	

12963 Maurer Industrial Dr. Sunset Hills, MO 63127
314-842-4033 (tel.) 314-842-5957 (fax) david@cochranengineering.com
COCHRAN
• Civil Engineering • Land Surveying • Architecture • Site Development • General Consulting • Master Planning
CERTIFICATE OF AUTHORITY NUMBER - 006937

Three working days prior to the start of any excavation on this site, contractor shall call 1-800-344-7483 for utility location information.

All OSHA rules & regulations established for the type of construction required by these plans shall be strictly followed (i.e. Trenching, Shoring, etc.)

MILLER STREET PHASE 2 IMPROVEMENTS
FEDERAL PROJECT NO. STP-5401(632)
NEW HAVEN, MISSOURI

REVISION:	DATE:	DWN. BY:	APP'D. BY:

UTILITY PLAN

DWN. BY: M.R.B. APP'D. BY: T.D.T.
DATE: FEBRUARY 2011
SCALE: 1" = 50'
PROJ. NO: SC10-224
DWG. NO: U-2

Drawing name: J:\SC10-221\UTILITY_PH2.dwg Tab: U-2 Plotted on: Oct 20, 2011 - 8:28am Plotted by: nclark

UTILITY PLAN

** CONTRACTOR SHALL RELOCATE ALL EXISTING SIGNS, PLANTERS, MAILBOXES, RUN-OFF PIPES AND PRIVATE LIGHTS AS NECESSARY FOR THE CONSTRUCTION OF THE IMPROVEMENTS. NEW LOCATIONS SHALL BE AS DIRECTED BY THE ENGINEER. SEE THE REMOVAL OF IMPROVEMENTS SECTION IN THE SPECIFICATIONS. **

** CONTRACTOR SHALL ADJUST TO GRADE ALL UTILITIES NECESSARY TO BRING THE UTILITY TO THE GRADE OF THE NEW PAVEMENT. SEE THE UTILITY ADJUSTMENT SECTION OF THE SPECIFICATIONS. **

** CONTRACTOR SHALL PRESERVE ALL SEWER LATERALS. ANY DAMAGE SHALL BE REPAIRED BY CITY APPROVED METHOD. ** (INCIDENTAL TO CONSTRUCTION)

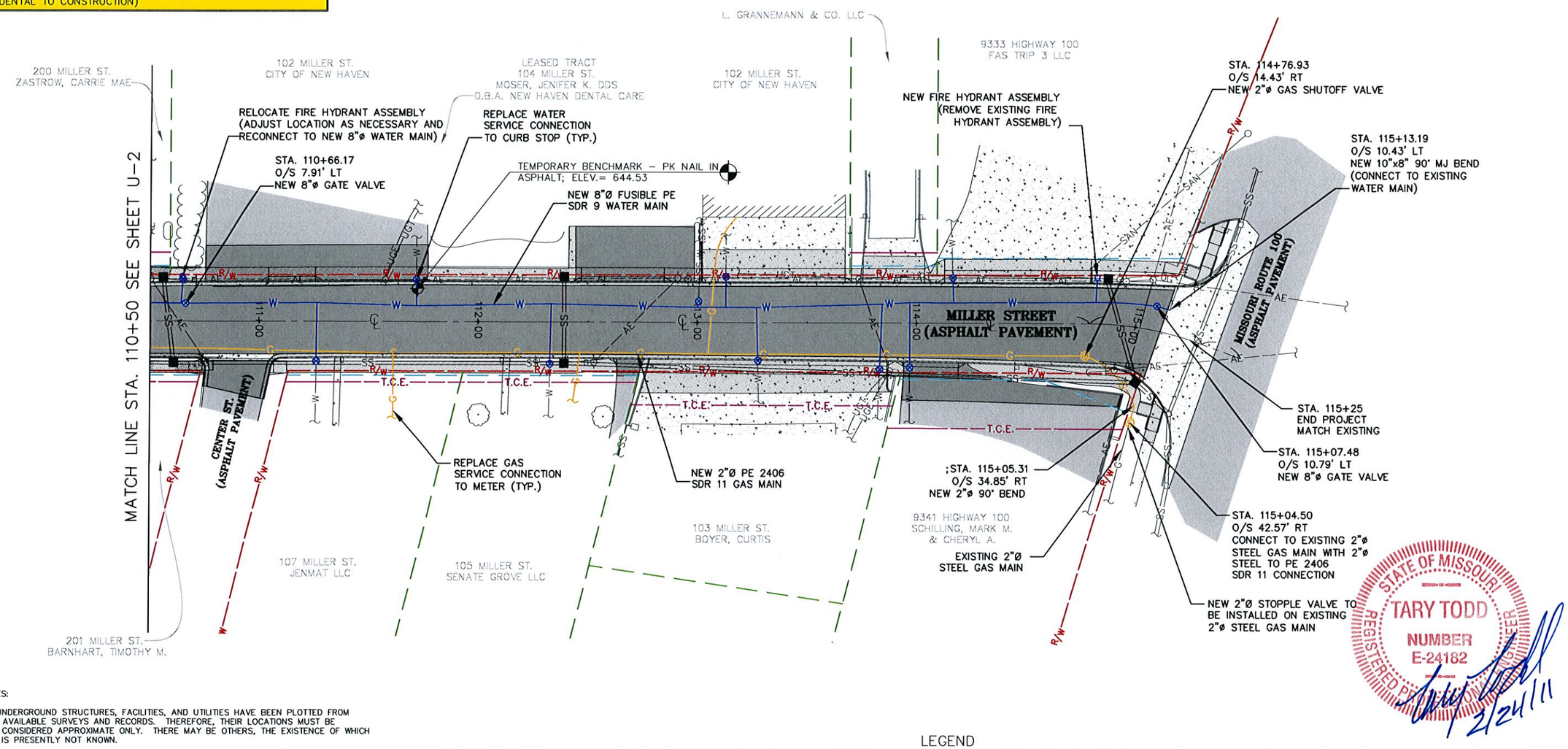

STATE OF MISSOURI
TARY TODD
NUMBER
E-24182
REGISTERED PROFESSIONAL ENGINEER
2/24/11

NOTES:

1. UNDERGROUND STRUCTURES, FACILITIES, AND UTILITIES HAVE BEEN PLOTTED FROM AVAILABLE SURVEYS AND RECORDS. THEREFORE, THEIR LOCATIONS MUST BE CONSIDERED APPROXIMATE ONLY. THERE MAY BE OTHERS, THE EXISTENCE OF WHICH IS PRESENTLY NOT KNOWN.
2. TEMPORARY BENCHMARK IS A PK NAIL IN ASPHALT LOCATED ON THE EAST SIDE OF MILLER STREET APPROXIMATELY 365 FEET NORTH OF THE INTERSECTION OF HIGHWAY 100, ELEV.= 644.53. SITE BENCHMARK IS MISSOURI GRS MONUMENT FR-82, ELEV.= 704.72.
3. THE CONTRACTOR IS SPECIFICALLY CAUTIONED THAT THE LOCATION AND/OR ELEVATION OF EXISTING UTILITIES AS SHOWN ON THESE PLANS IS BASED ON RECORDS OF VARIOUS UTILITY COMPANIES AND, WHERE POSSIBLE, MEASUREMENTS TAKEN IN THE FIELD. THE INFORMATION IS NOT TO BE RELIED ON AS BEING EXACT OR COMPLETE. THE CONTRACTOR MUST CALL THE APPROPRIATE UTILITY COMPANY AT LEAST 48 HOURS BEFORE ANY EXCAVATION TO REQUEST EXACT FIELD LOCATION OF UTILITIES. LOCATION, RELOCATION AND CONNECTION OF THE UTILITIES SHALL BE COORDINATED WITH THE UTILITY COMPANIES.
4. TOPOGRAPHIC INFORMATION AS SHOWN HEREON PER FIELD WORK PERFORMED BY T.J.V. & D.P.R. OF COCHRAN, DATED JULY, 2010.
5. THIS DRAWING DOES NOT CONSTITUTE A BOUNDARY SURVEY.
6. THIS PROJECT IS ORIENTED TO GRID NORTH DERIVED FROM GPS OBSERVATIONS OF MISSOURI GRS MONUMENT FR-82 USING MODOT'S RTK GPS NETWORK.
7. THIS SITE LIES WITHIN "ZONE C", AREAS OF MINIMAL FLOODING PER FEMA FLOOD INSURANCE RATE MAP COMMUNITY-PANEL NUMBER 290133 0001A, EFFECTIVE DATE FEBRUARY 18, 1981.

LEGEND

PROPERTY LINE		EXISTING AERIAL ELECTRIC	—AE—	EXISTING GAS VALVE	Ⓖ	NEW ASPHALT PAVEMENT	
EXISTING RIGHT-OF-WAY	—R/W—	EXISTING SANITARY SEWER	—SAN—	EXISTING FIRE HYDRANT		NEW CONCRETE PAVEMENT	
CENTERLINE OF ROAD	—℄—	EXISTING WATER MAIN	—W—	EXISTING MAILBOX		NEW CONCRETE APPROACH	
EXISTING MAJOR CONTOUR	—970—	EXISTING GAS MAIN	—G—	EXISTING SIGN		NEW SIDEWALK	
EXISTING MINOR CONTOUR		EXISTING STORM SEWER	═SS═	EXISTING FENCE	—X—	NEW CURB RAMP	
EXISTING BUILDING		EXISTING UNDERGROUND TELEPHONE	—UGT—	EXISTING LIGHT		NEW CURB AND GUTTER	
		EXISTING FIBER OPTIC	—FO—	EXISTING BUSH		NEW STORM SEWER	═SS═
EXISTING CONCRETE PAVEMENT		EXISTING WATER VALVE	⊗	EXISTING TREE		NEW CURB INLET	■
EXISTING GRAVEL		EXISTING WATER METER	WM	EXISTING TREELINE		NEW WATER MAIN	—W—
EXISTING ASPHALT PAVEMENT		EXISTING UTILITY POLE		EXISTING UTILITY (TERMINUS UNKNOWN)		NEW GATE VALVE	⊗
		EXISTING GUY WIRE				NEW FIRE HYDRANT	
						NEW GAS MAIN	—G—
						NEW GAS VALVE	Ⓖ
						TEMPORARY CONSTRUCTION EASEMENT	—T.C.E.—
						PERMANENT EASEMENT	

12963 Maurer Industrial Dr. 314-842-4033 (tel.)
Sunset Hills, MO 63127 314-842-5957 (fax)
david@cochraneng.com
COCHRAN
• Civil Engineering
• Land Surveying
• Architecture
• Site Development
• General Consulting
• Master Planning
CERTIFICATE OF AUTHORITY NUMBER - 006937

Three working days prior to the start of any excavation on this site, contractor shall call the "Missouri One Call" for utility location information.

All OSHA rules & regulations established for the type of construction required by these plans shall be strictly followed (ie. Trenching, Blasting, etc.)

MILLER STREET PHASE 2 IMPROVEMENTS
FEDERAL PROJECT NO. STP-5401(632)
NEW HAVEN, MISSOURI

DATE:	REVISION:	DWN. BY:	APP'D. BY:

DWN. BY: M.R.B. APP'D. BY: T.D.T.
DATE: FEBRUARY 2011
SCALE: 1" = 50'
PROJ. NO: SC10-224
DWG. NO: U-3

UTILITY PLAN

Drawing name: J:\SC10-221\UTILITY_PH2.dwg Tab: U-3 Plotted on: Oct 20, 2011 - 8:28am Plotted by: nclark

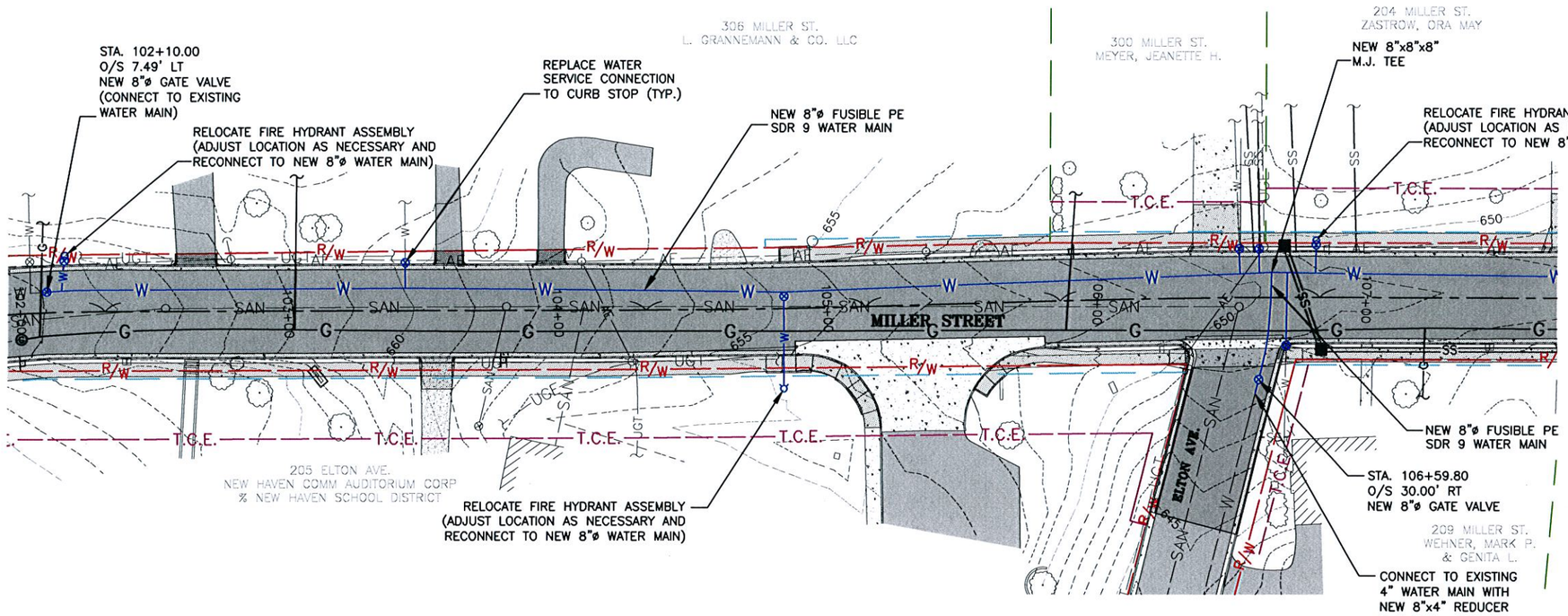

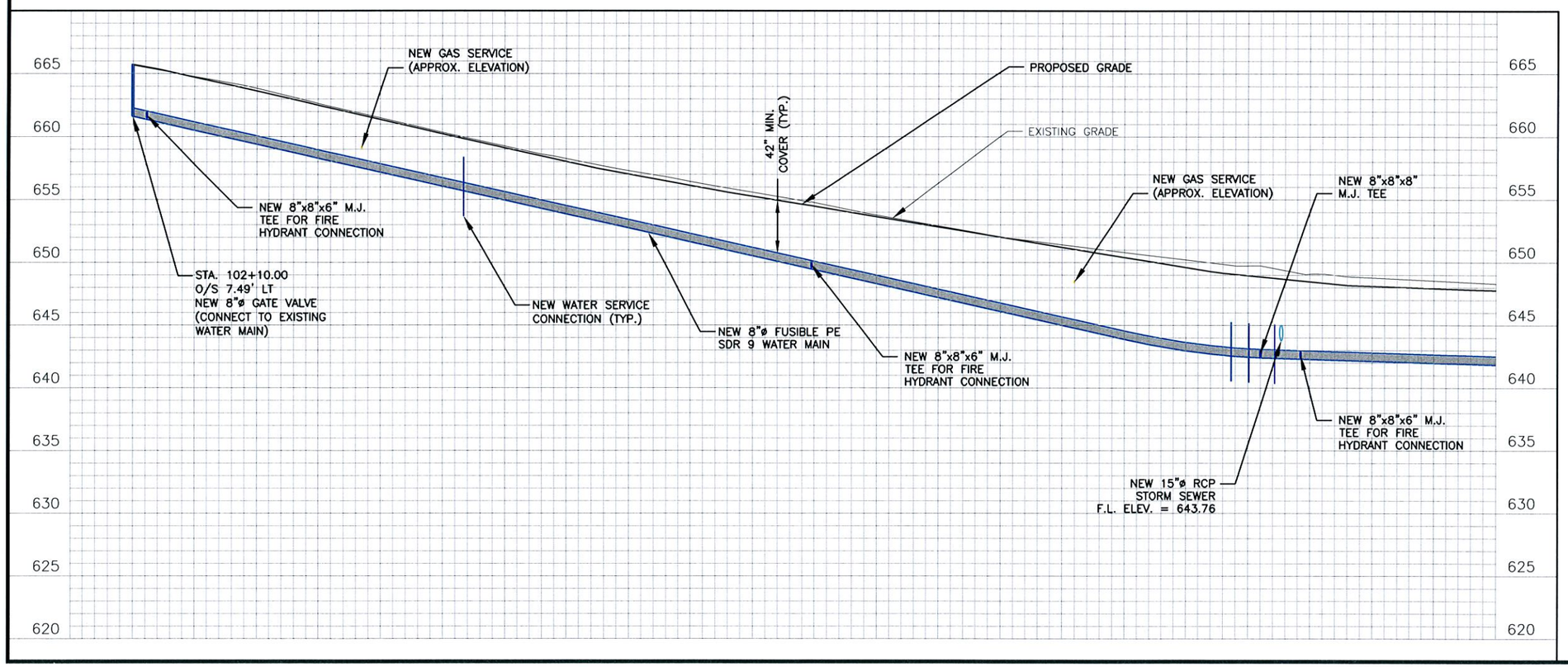

STATE OF MISSOURI
TARY TODD
NUMBER
E-24182
REGISTERED PROFESSIONAL ENGINEER
2/24/11

COCHRAN
12963 Maurer Industrial Dr. 314-842-4033 (tel.)
Sunset Hills, MO 63127 314-842-5957 (fax)
david@cochraneng.com
• Civil Engineering
• Land Surveying
• Architecture
• Site Development
• General Consulting
• Master Planning
CERTIFICATE OF AUTHORITY NUMBER - 006937

Three working days prior to the start of any excavation on this site, contractor shall call 1-800-DIG-RITE for utility location information.

All OSHA rules & regulations established for the safety of construction required by these plans shall be strictly followed (ie. Trenching, Blasting, etc.)

MILLER STREET PHASE 2 IMPROVEMENTS
FEDERAL PROJECT NO. STP-5401(632)
NEW HAVEN, MISSOURI

DATE:	REVISION:	DWN. BY:	APP'D. BY:

DWN. BY:	APP'D. BY:
M.R.B.	T.D.T.

DATE: FEBRUARY 2011

HORIZONTAL SCALE: 1" = 50'

VERTICAL SCALE: 1" = 10'

PROJ. NO: SC10-224

DWG. NO: W-1

WATER MAIN PLAN AND PROFILE

Drawing name: J:\SC10-221\RCp01007.dwg Tab: W-1 Plotted on: Oct 18, 2011 - 10:01am Plotted by: nclark

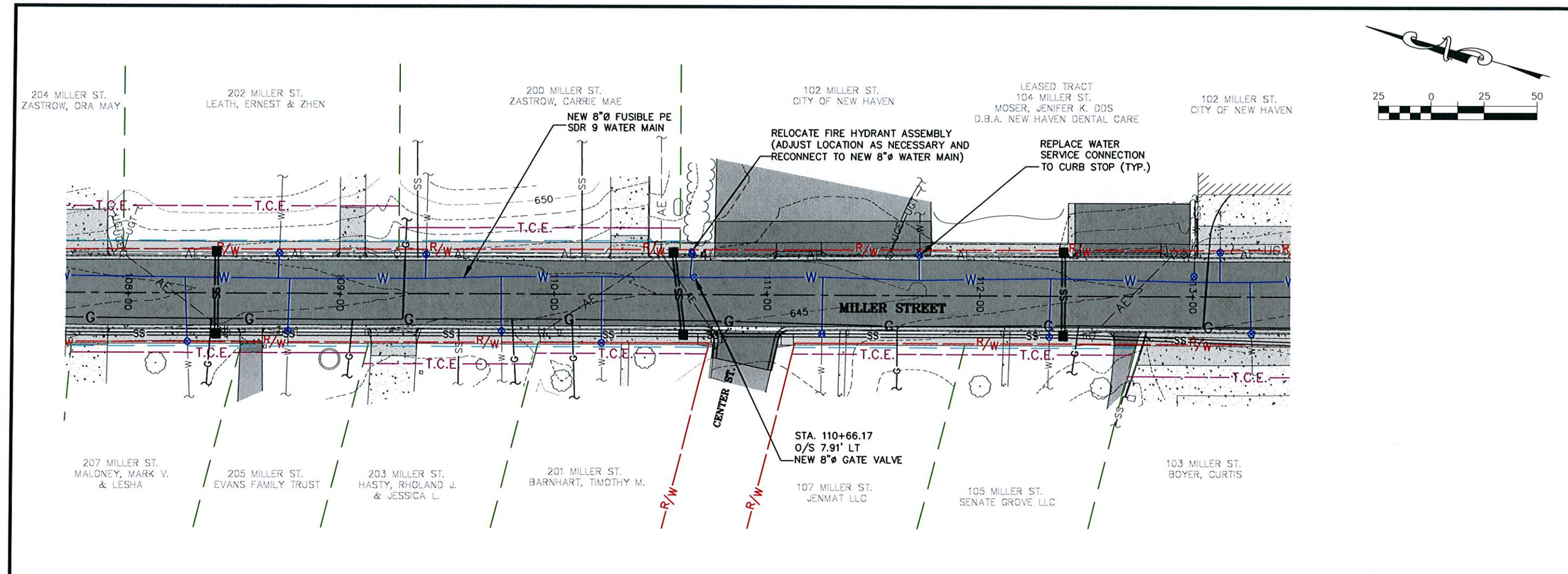

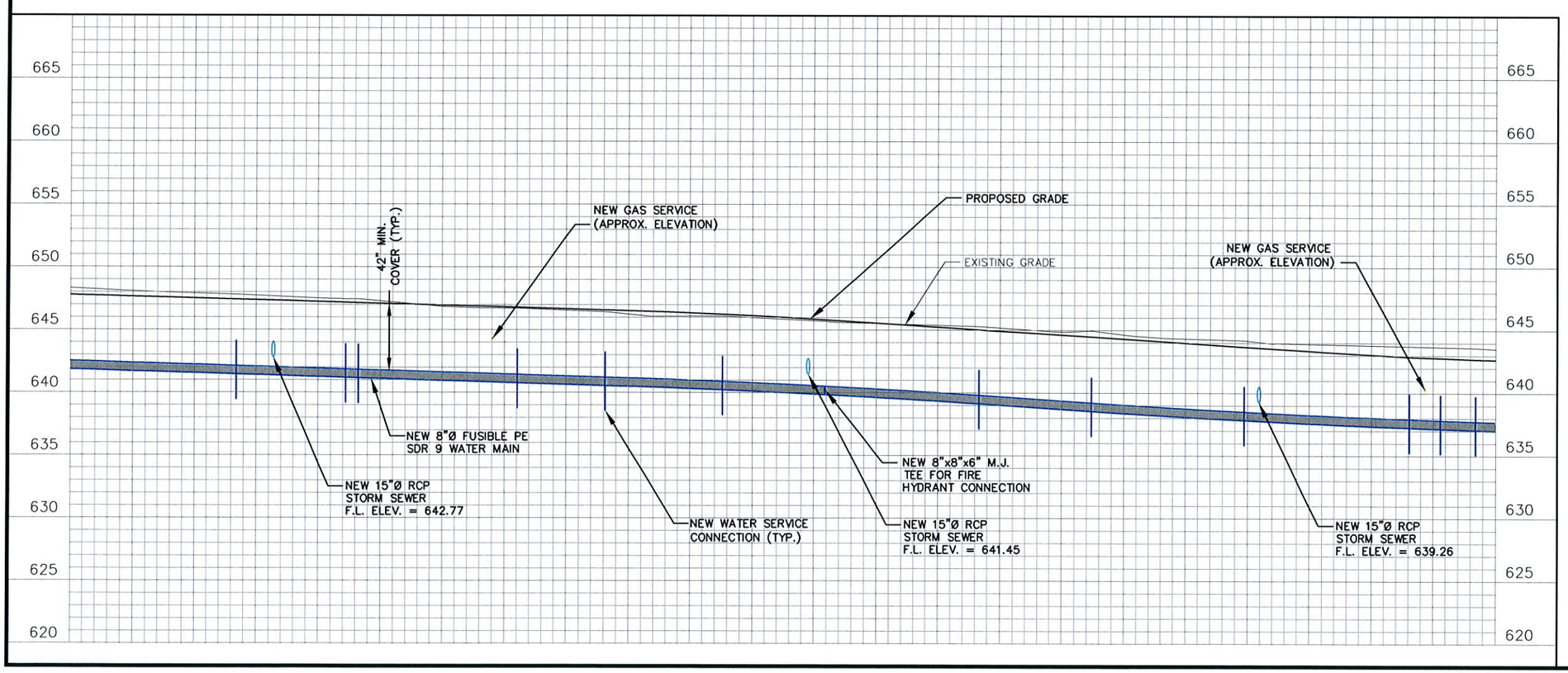

STATE OF MISSOURI
TARY TODD
NUMBER
E-24182
REGISTERED PROFESSIONAL ENGINEER
2/24/11

12963 Maurer Industrial Dr.
Sunset Hills, MO 63127
314-842-4033 (tel.)
314-842-5957 (fax)
dovid@cochraneng.com
COCHRAN
• Civil Engineering
• Land Surveying
• Architecture
• Site Development
• General Consulting
• Master Planning
CERTIFICATE OF AUTHORITY NUMBER - 006937

Three working days prior to the start of any excavation within the right of way, contact and call 1-800-DIG-RITE for utility location information.

All OSHA rules & regulations established for the type of construction required by these plans shall be strictly followed (i.e. Trenching, Blasting, etc.)

MILLER STREET PHASE 2 IMPROVEMENTS

FEDERAL PROJECT NO. STP-5401(632)

NEW HAVEN, MISSOURI

DWN. BY:	APPD. BY:
DATE:	REVISION:
DWN. BY: M.R.B.	APPD. BY: T.D.T.
DATE: FEBRUARY 2011	
HORIZONTAL SCALE: 1" = 50'	
VERTICAL SCALE: 1" = 10'	
PROJ. NO: SC10-224	
DWG. NO: W-2	

WATER MAIN PLAN AND PROFILE

Drawing name: J:\SC10-221\RCp02007.dwg Tab: W-2 Plotted on: Feb 24, 2011 - 8:13am Plotted by: mspalding

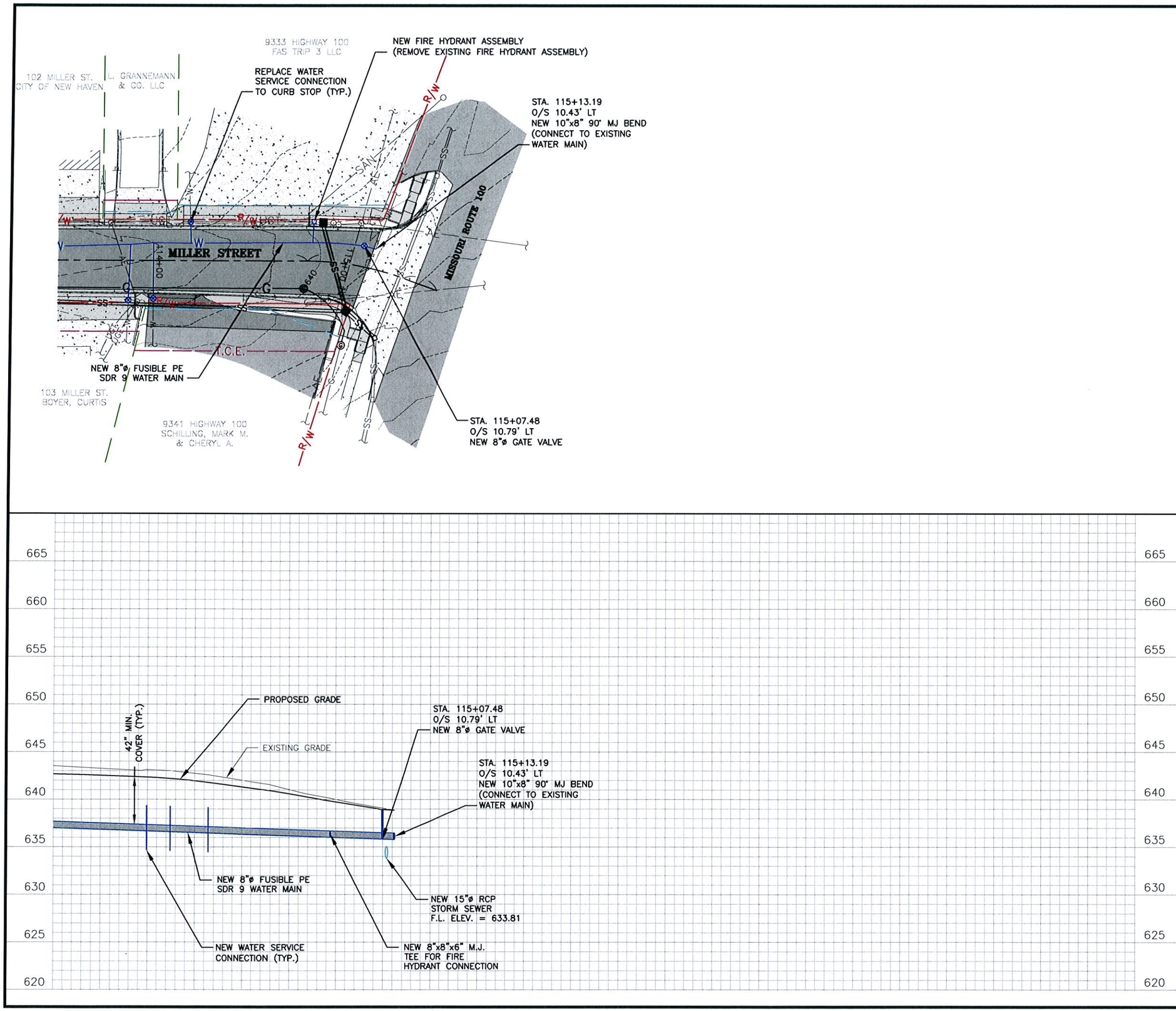

STATE OF MISSOURI
TARY TODD
NUMBER
E-24182
REGISTERED PROFESSIONAL ENGINEER
2/24/11

12963 Maurer Industrial Dr. 314-842-4033 (tel.)
Sunset Hills, MO 63127 314-842-5957 (fax)
david@cochraneng.com
COCHRAN
• Civil Engineering
• Land Surveying
• Architecture
• Site Development
• General Consulting
• Master Planning
CERTIFICATE OF AUTHORITY NUMBER - 006937

Three working days prior to the start of any excavation on this site contractor shall call 1-800-DIG-RITE for utility location information.

All OSHA rules & regulations established for the type of construction required by these contract documents followed (ie. Trenching, Blasting, etc.)

MILLER STREET PHASE 2 IMPROVEMENTS

FEDERAL PROJECT NO. STP-5401(632)

NEW HAVEN, MISSOURI

DWN. BY:	APP'D. BY:
DATE:	REVISION:
DWN. BY: M.R.B.	APP'D. BY: T.D.T.
DATE: FEBRUARY 2011	
HORIZONTAL SCALE: 1" = 50'	
VERTICAL SCALE: 1" = 10'	
PROJ. NO: SC10-224	
DWG. NO: W-3	

WATER MAIN PLAN AND PROFILE

Drawing name: J:\SC10-221\RCp03007.dwg Tab: W-3 Plotted on: Oct 18, 2011 - 10:02am Plotted by: nclark

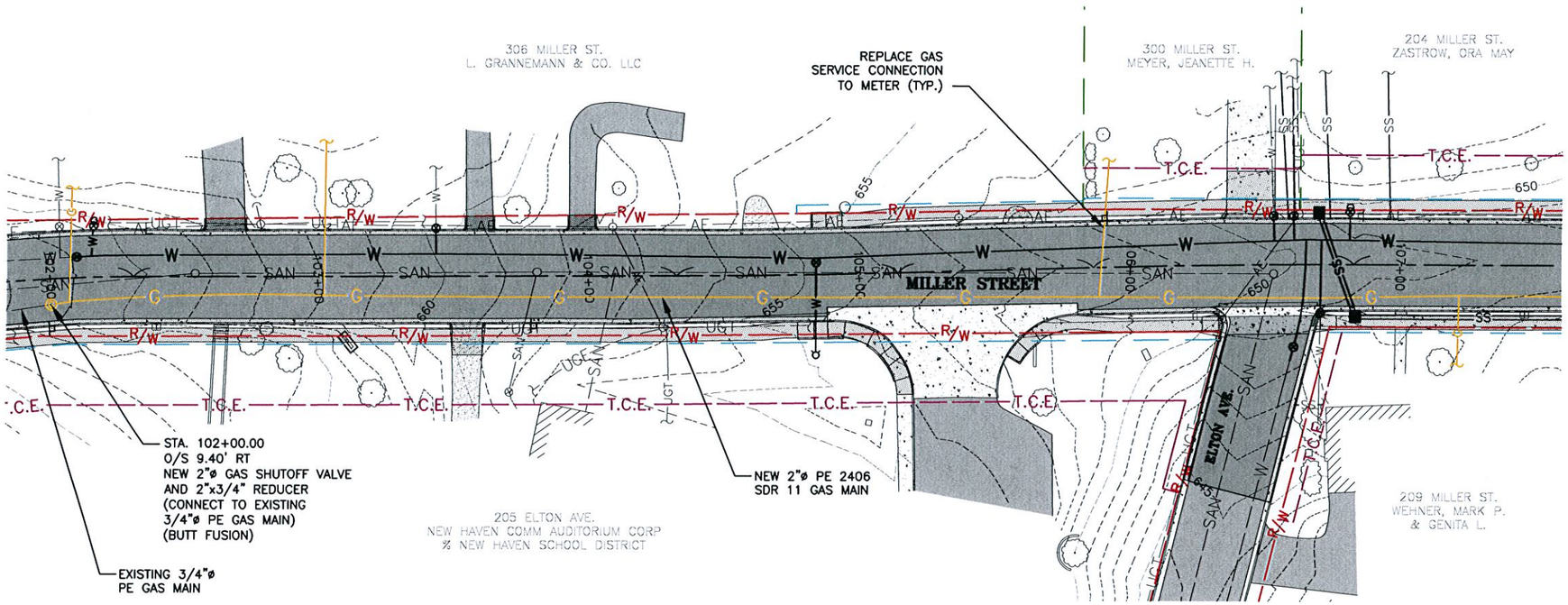

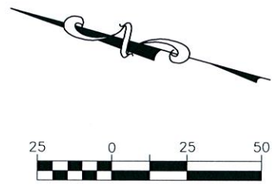

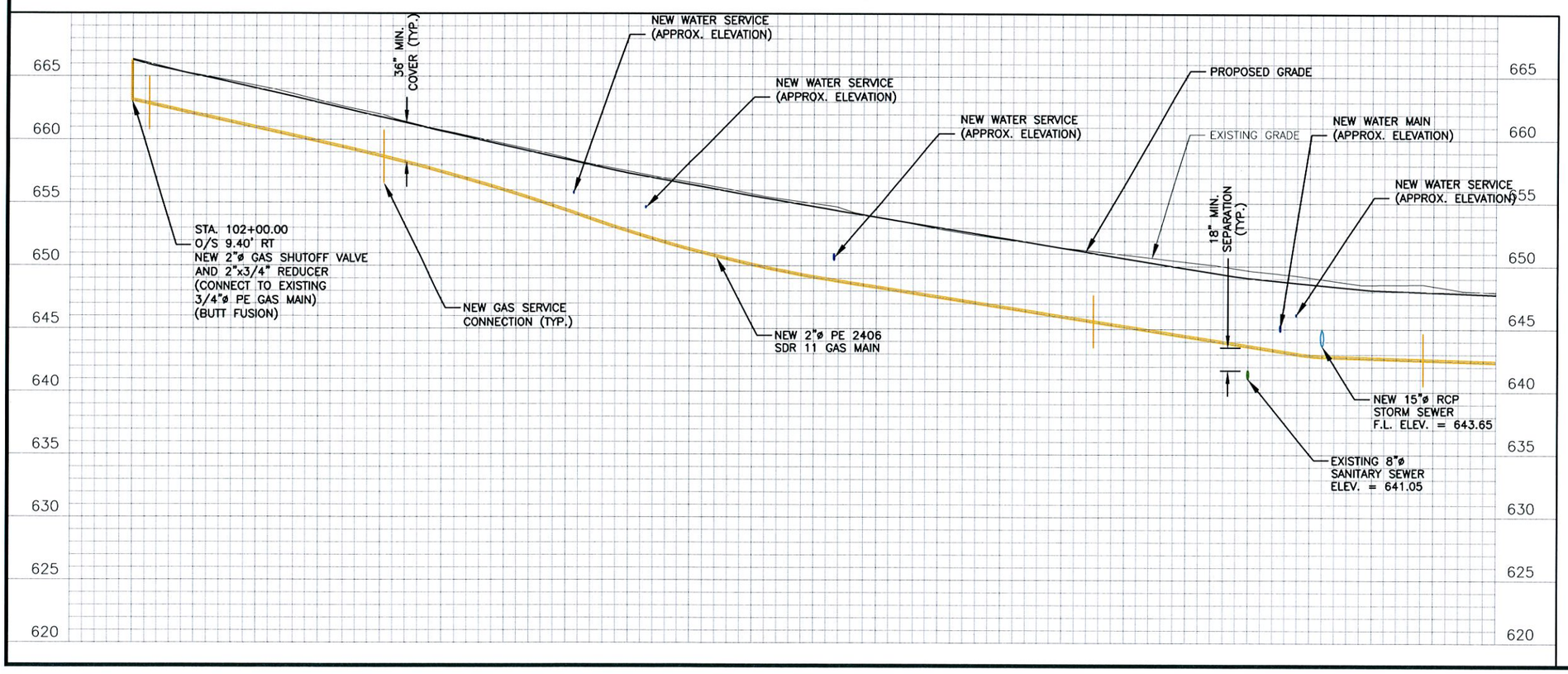

STATE OF MISSOURI
TARY TODD
NUMBER
E-24182
REGISTERED PROFESSIONAL ENGINEER
2/24/11

12963 Maurer Industrial Dr.
Sunset Hills, MO 63127
314-842-4033 (tel.)
314-842-5957 (fax)
david@cochroneng.com
COCHRAN
• Civil Engineering
• Land Surveying
• Architecture
• Site Development
• General Consulting
• Master Planning
CERTIFICATE OF AUTHORITY NUMBER - 006937

Three working days prior to the start of any excavation on this site contractor shall call 1-800-DIG-RITE for utility location information.

All OSHA rules & regulations established for the type of construction required by these contract documents shall be followed (ie. Trenching, Blasting, etc.)

MILLER STREET PHASE 2 IMPROVEMENTS
FEDERAL PROJECT NO. STP-5401(632)
NEW HAVEN, MISSOURI

GAS MAIN PLAN AND PROFILE

DATE:	REVISION:	DWN. BY:	APPD. BY:

DRN. BY: M.R.B.	APPD. BY: T.D.T.
DATE: FEBRUARY 2011	
HORIZONTAL SCALE: 1" = 50'	
VERTICAL SCALE: 1" = 10'	
PROJ. NO: SC10-224	
DWG. NO: G-1	

Drawing name: J:\SC10-221\RCp01008.dwg Tab: G-1 Plotted on: Oct 18, 2011 - 10:03am Plotted by: nclark

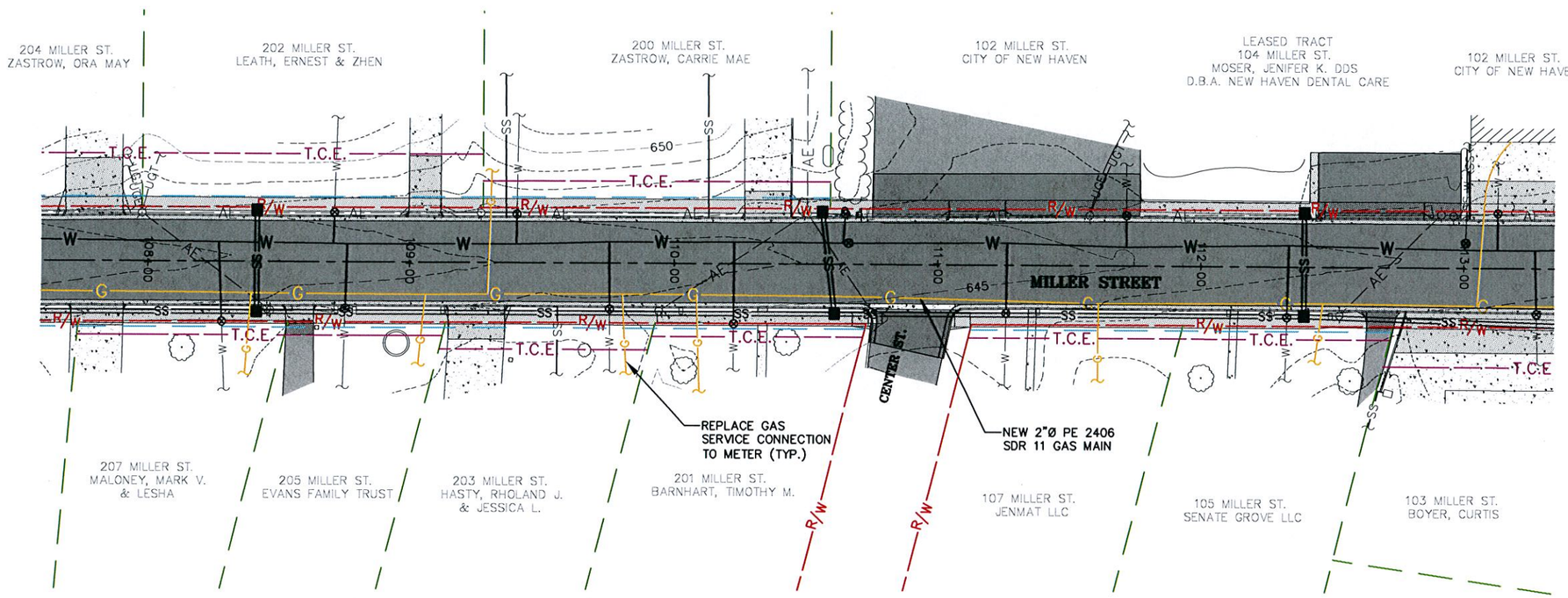

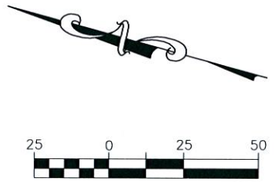

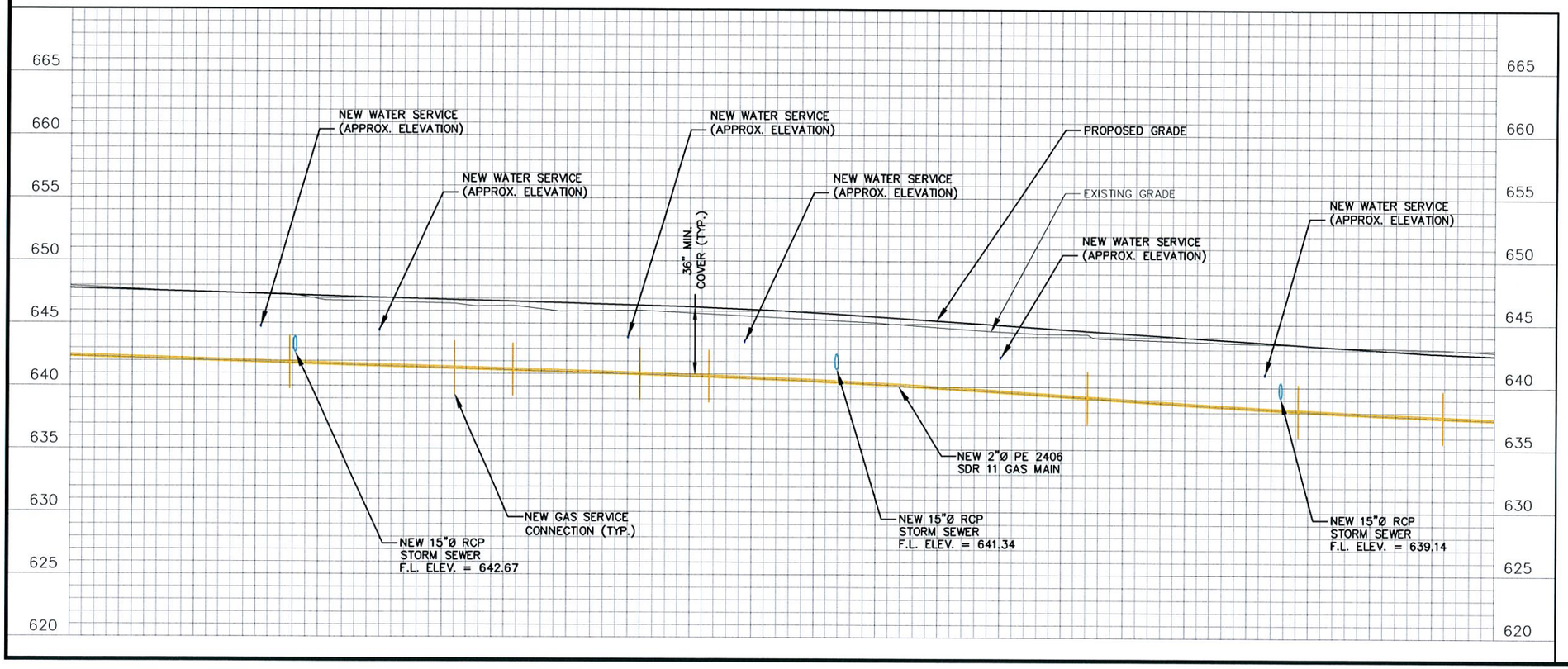

STATE OF MISSOURI
TARY TODD
NUMBER E-24182
REGISTERED PROFESSIONAL ENGINEER
2/24/11

OCHRAN
12963 Maurer Industrial Dr.
Sunset Hills, MO 63127
314-842-4033 (tel.)
314-842-3957 (fax)
david@occhranengr.com
• Civil Engineering
• Land Surveying
• Architecture
• Site Development
• General Consulting
• Master Planning
CERTIFICATE OF AUTHORITY NUMBER - 006937

Three working days prior to the start of any excavation on this site, contractor shall call 1-800-DIG-RITE (or utility location information.

All OSHA rules & regulations established for the type of construction required by these plans shall be strictly followed (ie. Trenching, Blasting, etc.)

MILLER STREET PHASE 2 IMPROVEMENTS

FEDERAL PROJECT NO. STP-5401(632)

NEW HAVEN, MISSOURI

GAS MAIN PLAN AND PROFILE

DATE:	
REVISIONS:	
DWN. BY:	APP'D. BY:
M.R.B.	T.D.T.
DATE: FEBRUARY 2011	
HORIZONTAL SCALE: 1" = 50'	
VERTICAL SCALE: 1" = 10'	
PROJ. NO: SC10-224	
DWG. NO: G-2	

Drawing name: J:\SC10-221\RCp02008.dwg Tab: G-2 Plotted on: Feb 24, 2011 - 8:14am Plotted by: mspalding

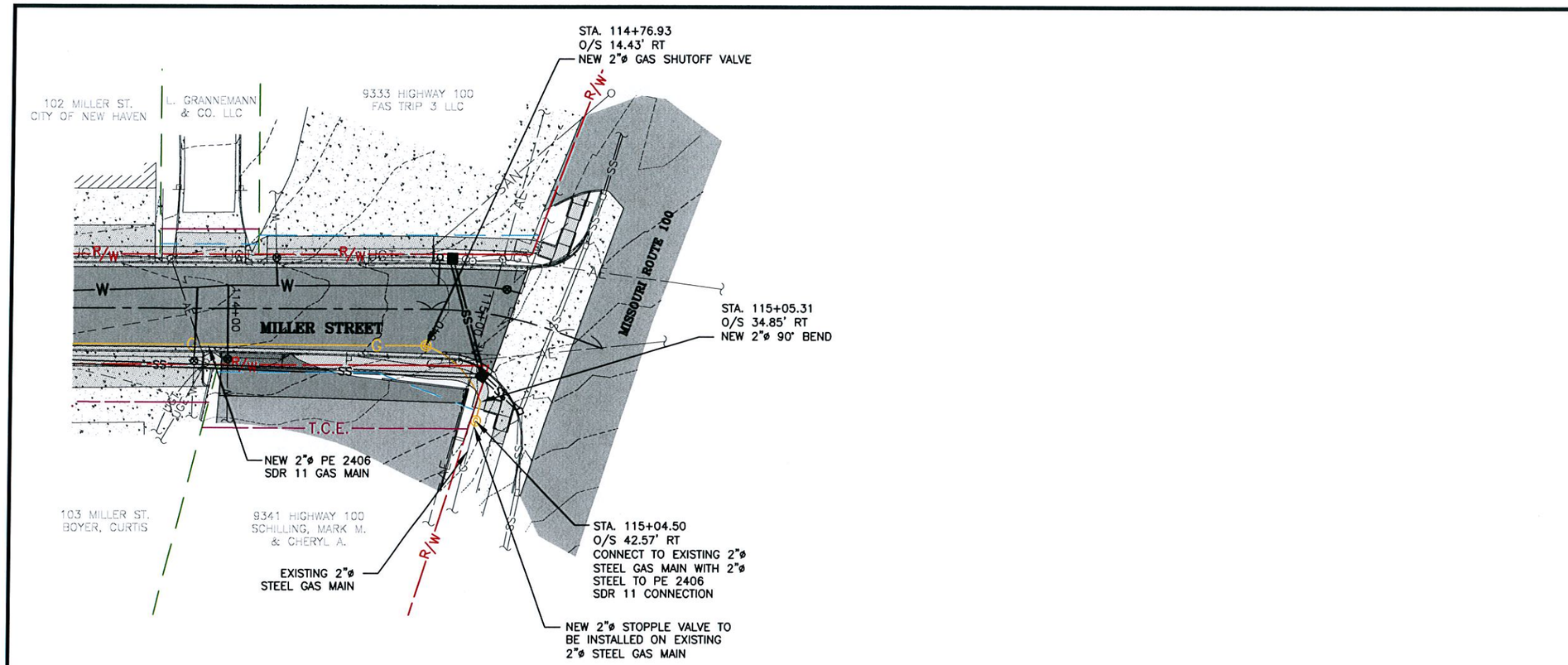

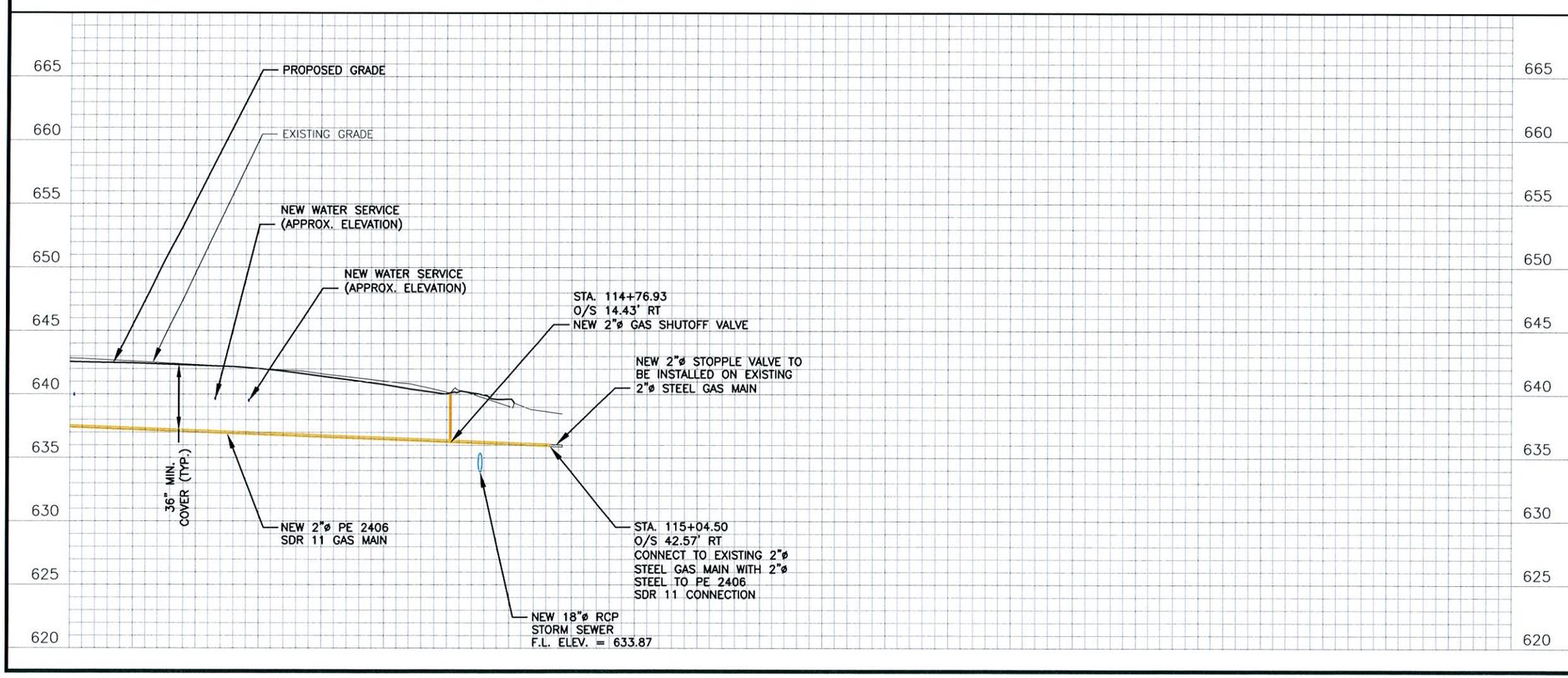

STATE OF MISSOURI
TARY TODD
NUMBER
E-24182
REGISTERED PROFESSIONAL ENGINEER
12/24/11

12963 Maurer Industrial Dr.
Sunset Hills, MO 63127
314-842-4033 (tel.)
314-842-5957 (fax)
david@cochraneng.com
COCHRAN
• Civil Engineering
• Land Surveying
• Architecture
• Site Development
• General Consulting
• Master Planning
CERTIFICATE OF AUTHORITY NUMBER - 006937

Three working days prior to the start of any excavation on this site, contractor shall call 1-800-DIG-RITE (for utility location information).

All OSHA rules & regulations established for the type of construction required by these plans shall be strictly followed (ie. Trenching, Blasting, etc.)

MILLER STREET PHASE 2 IMPROVEMENTS

FEDERAL PROJECT NO. STP-5401(632)

NEW HAVEN, MISSOURI

GAS MAIN PLAN AND PROFILE

DATE:	REVISION:	DWN. BY:	APPD. BY:

DWN. BY: M.R.B.	APPD. BY: T.D.T.
DATE: FEBRUARY 2011	
HORIZONTAL SCALE: 1" = 50'	
VERTICAL SCALE: 1" = 10'	
PROJ. NO: SC10-224	
DWG. NO: G-3	

Drawing name: J:\SC10-22\RCp03008.dwg Tab: G-3 Plotted on: Oct 18, 2011 - 10:05am Plotted by: nclark

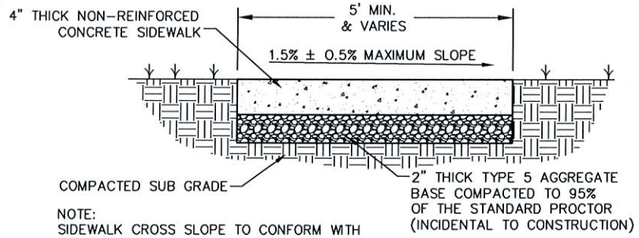

NOTE:
SIDEWALK CROSS SLOPE TO CONFORM WITH EXISTING DRAINAGE PATTERNS.

SIDEWALK CROSS-SECTION DETAIL
NO SCALE

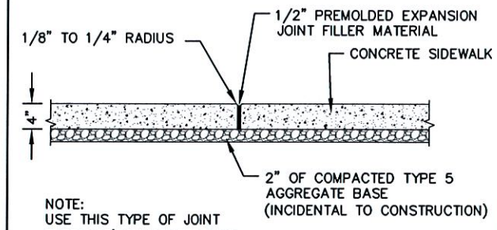

NOTE:
USE THIS TYPE OF JOINT EVERY 15' ON CENTER AND AT ALL STREET INTERSECTIONS

TYPICAL SIDEWALK EXPANSION JOINT
NO SCALE

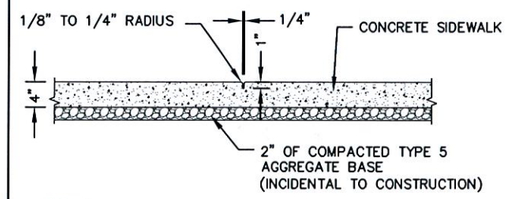

NOTE:
USE THIS TYPE OF JOINT EVERY 5' ON CENTER.

TYPICAL SIDEWALK CONTROL JOINT
NO SCALE

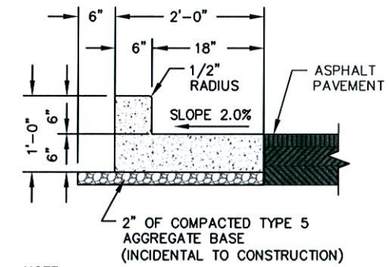

NOTE:
CONCRETE SHALL BE 4,000 PSI AFTER 28 DAYS CURING TIME.

CONCRETE CURB AND GUTTER
NO SCALE

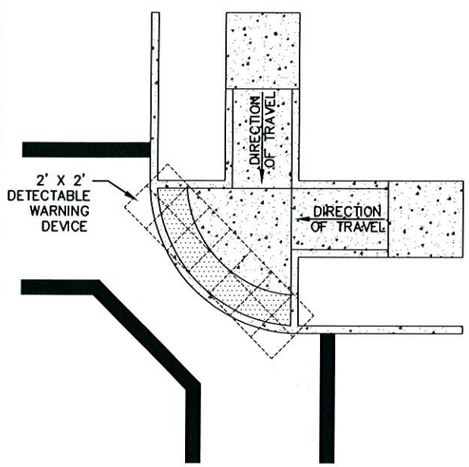

DETECTABLE WARNING DEVICE LAYOUT FOR 2 DIRECTION RAMP
NO SCALE

NOTES:

1. CONTRACTOR MUST TRIM THE DETECTABLE WARNING PANELS TO PROVIDE A 2' WIDE STRIP THAT IS THE FULL WIDTH OF THE RAMP AND FOLLOWS THE CURVATURE OF THE CURB.
2. 2' X 2' DETECTABLE WARNING PANEL IS FOR REFERENCE ONLY. CONTRACTOR MAY USE ALTERNATE SIZED PANELS TO MINIMIZE CUTTING.
3. THE DETECTABLE WARNING DEVICE LAYOUT FOR 1 DIRECTIONAL RAMP MUST BE USED WHEN THE "X" DIMENSION IS GREATER THAN 5 FEET. WHEN "X" IS LESS THAN 5 FEET, THE DETECTABLE WARNING DEVICES SHALL BE AT THE BOTTOM OF THE RAMP AND PARALLEL TO THE DIRECTION OF TRAVEL.

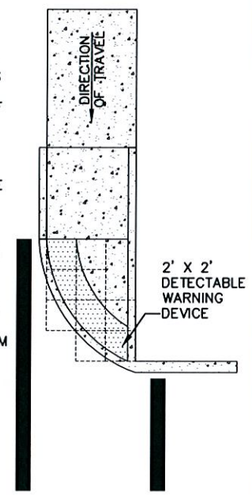

DETECTABLE WARNING DEVICE LAYOUT FOR 1 DIRECTION RAMP
NO SCALE

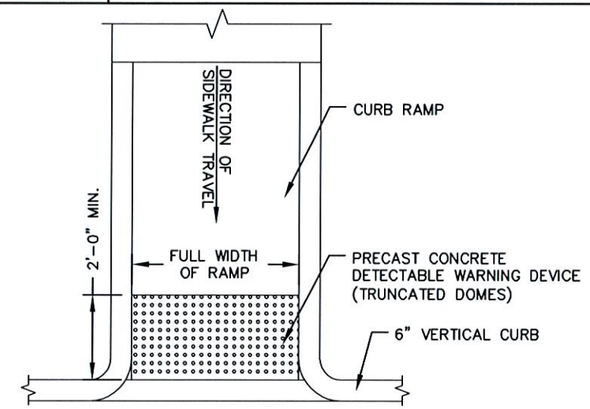

DETECTABLE WARNING DEVICE DETAIL
NO SCALE

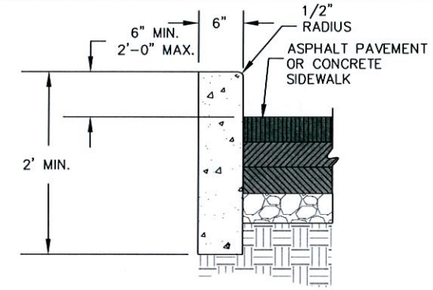

CONCRETE VERTICAL CURB
NO SCALE

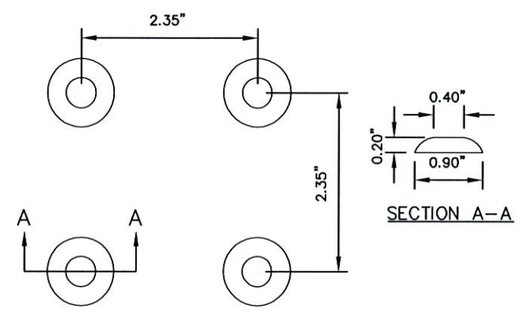

SECTION A-A

PLAN VIEW

NOTE:
DETECTABLE WARNING DEVICES SHALL BE RED, PRECAST CONCRETE.

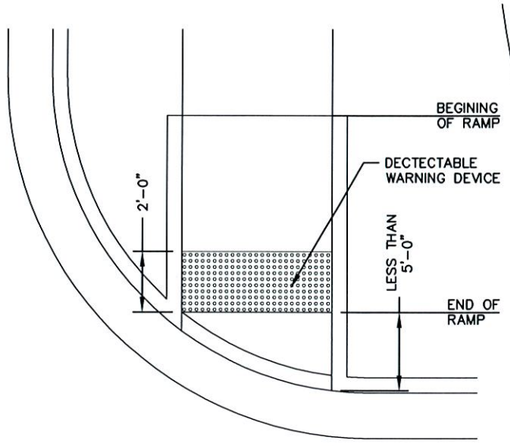

DETECTABLE WARNING DEVICE ORIENTATION DETAIL 1
NO SCALE

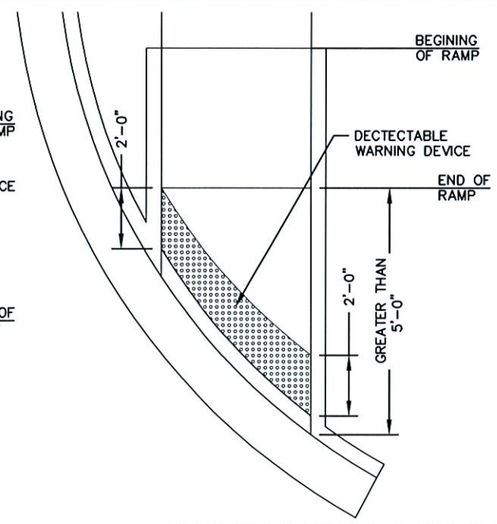

DETECTABLE WARNING DEVICE ORIENTATION DETAIL 2
NO SCALE

CONSTRUCTION NOTES FOR ADA RAMPS:

1. ALL RAMPS SHALL BE IN ACCORDANCE WITH CURRENT ADA STANDARDS.
2. MAXIMUM RAMP LENGHT SHALL BE 15'.
3. INSTALL DETECTABLE WARNING DEVICE IN ACCORDANCE WITH CURRENT ADA STANDARDS AT PUBLIC STREET INTERSECTIONS AND ANY SIGNALIZED INTERSECTION.
4. DETECTABLE WARNING DEVICE SHALL SPAN THE ENTIRE WIDTH OF THE CURB RAMP.
5. TRUNCATED DOMES SHALL BE ALIGNED WITH THE DIRECTION OF SIDEWALK TRAVEL.
6. THE CROSS SLOPE OF LANDINGS AT THE TOP OF ALL CURB RAMPS SHALL BE 1.5% ± 0.5% IN ANY DIRECTION. LANDING DIMENSIONS SHALL BE 5' X 5'.
7. THE CROSS SLOPE OF ALL RAMPS SHALL BE 1.5% ± 0.5%.
8. THE COLOR OF ALL DETECTABLE WARNING DEVICES SHALL BE RED.

STATE OF MISSOURI
TARY TODD
NUMBER E-24182
REGISTERED PROFESSIONAL ENGINEER
2/24/11

COCHRAN
530A E. Independence Dr.
Union, Missouri 63084
636-584-0540 (tel)
636-584-0512 (fax)
mail@cochranengineering.com
• Civil Engineering
• Land Surveying
• Architecture
• Site Development
• General Consulting
• Master Planning

Two working days prior to the start of any excavation on this site, contractor shall call 1-800-344-7483 for utility location information.

All OSHA rules & regulations established for the type of construction required by these plans shall be strictly followed (i.e. trenching, blasting, etc.)

MILLER STREET PHASE 2 IMPROVEMENTS
FEDERAL PROJECT NO. STP-5401(632)
NEW HAVEN, MISSOURI

DATE:	REVISION:	DWN. BY:	APPD. BY:

DWN. BY: M.R.B.
APPD. BY: T.D.T.
DATE: FEBRUARY 2011
SCALE: NOT TO SCALE
PROJ. NO: SC10-224
DWG. NO: DE-1

DETAILS

Drawing name: J:\SC10-221\DETAILS_PH 2.dwg Tab: DE-1 Plotted on: Feb 24, 2011 - 8:14am Plotted by: mspalding

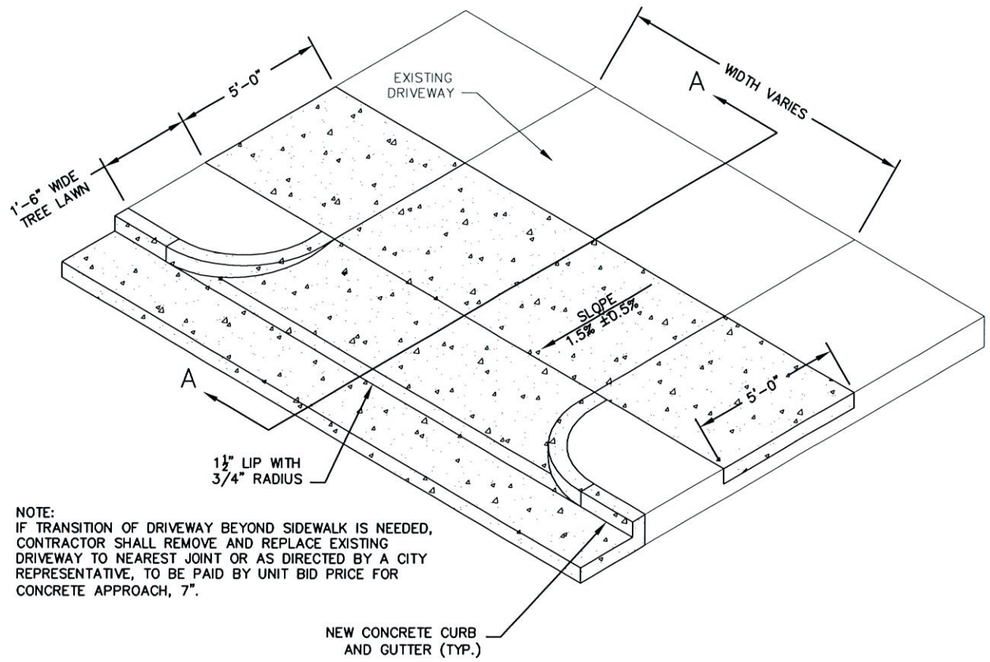

PLAN VIEW

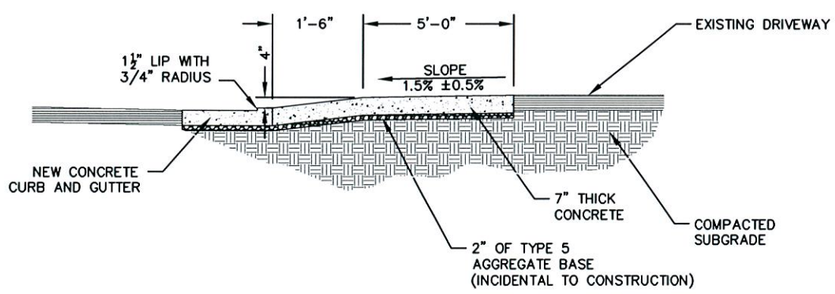

SECTION A–A

TYPE A CONCRETE APPROACH

NO SCALE

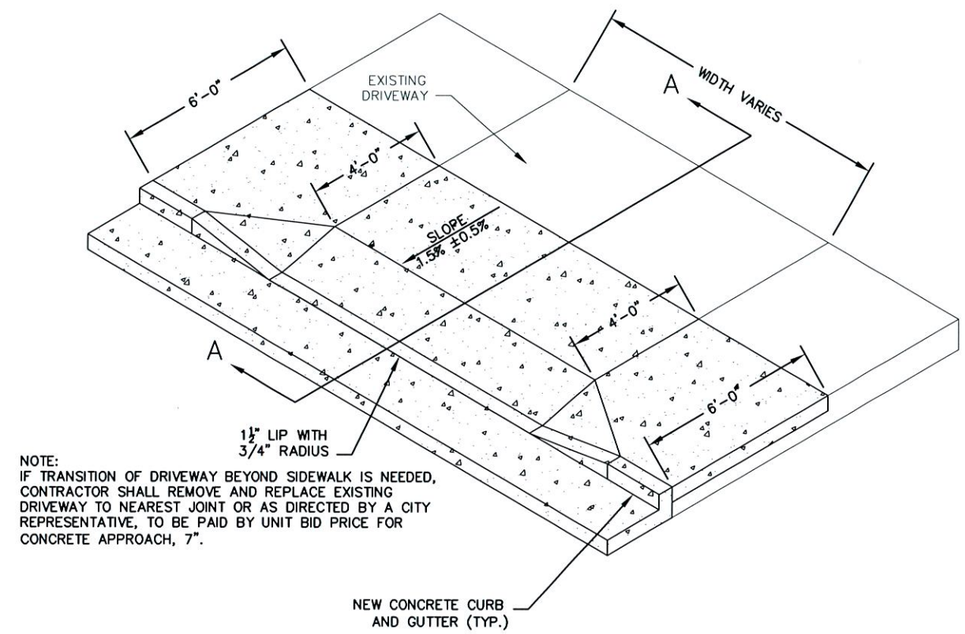

PLAN VIEW

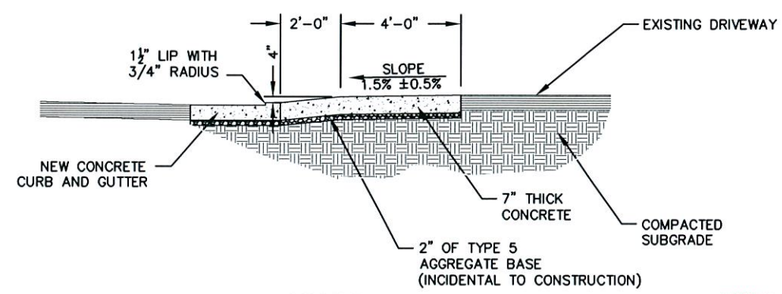

SECTION A–A

TYPE B CONCRETE APPROACH

NO SCALE

STATE OF MISSOURI
TARY TODD
NUMBER E-24182
REGISTERED PROFESSIONAL ENGINEER
2/24/11

COCHRAN
530A E. Independence Dr.
Union, Missouri 63084
636-584-0540 (tel.)
636-584-0512 (fax)
mail@cochranengineering.com
• Civil Engineering
• Land Surveying
• Architecture
• Site Development
• General Consulting
• Master Planning

Two working days prior to the start of any excavation on this site, contractor shall call 1-800-DIGGERS for utility location information.

All OSHA rules & regulations established for the type of construction required by these plans shall be strictly followed (i.e. trenching, blasting, etc.)

MILLER STREET PHASE 2 IMPROVEMENTS

FEDERAL PROJECT NO. STP-5401(632)

NEW HAVEN, MISSOURI

APPROACH DETAILS

DATE:	REVISION:	DWN. BY:	APPD. BY:

DWN. BY: M.R.B.	APPD. BY: T.D.T.
DATE: FEBRUARY 2011	
SCALE: NOT TO SCALE	
PROJ. NO: SC10-224	
DWG. NO: DE-2	

Drawing name: J:\SC10-221\DETAILS_PH 2.dwg Tab: DE-2 Plotted on: Oct 20, 2011 - 8:26am Plotted by: nclark

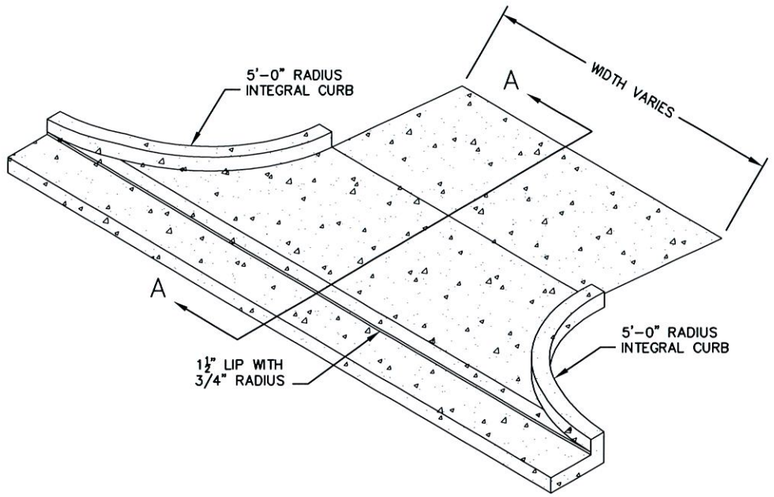

PLAN VIEW

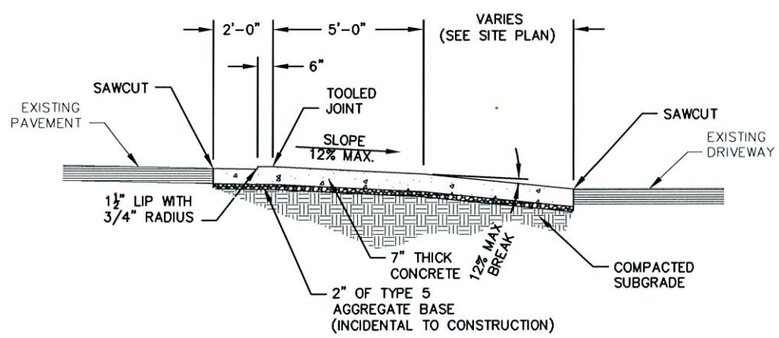

SECTION A–A

TYPE "C" CONCRETE APPROACH

NO SCALE

STATE OF MISSOURI
TARY TODD
NUMBER
E-24182
REGISTERED PROFESSIONAL ENGINEER

2/24/11

COCHRAN
530A E. Independence Dr.
Union, Missouri 63084
636-584-0540 (tel.)
636-584-0512 (fax)
mail@cochraneng.com
• Civil Engineering
• Land Surveying
• Architecture
• Site Development
• General Consulting
• Master Planning

Two working days prior to the start of any excavation on this site contractor shall call 1-800-DIG-RITE for utility location information.

All OSHA rules & regulations established for the type of construction required by these plans shall be strictly followed (ie. Trenching, Shoring, etc.)

MILLER STREET PHASE 2 IMPROVEMENTS

FEDERAL PROJECT NO. STP-5401(632)

NEW HAVEN, MISSOURI

APPROACH DETAILS

DATE:	REVISION:	DWN. BY:	APP'D. BY:

DWN. BY: M.R.B.
APP'D. BY: T.D.T.
DATE: FEBRUARY 2011
SCALE: NOT TO SCALE
PROJ. NO: SC10-224
DWG. NO: DE-3

Drawing name: J:\SC10-221\DETAILS_PH 2.dwg Tab: DE-3 Plotted on: Oct 20, 2011 - 8:37am Plotted by: nclark

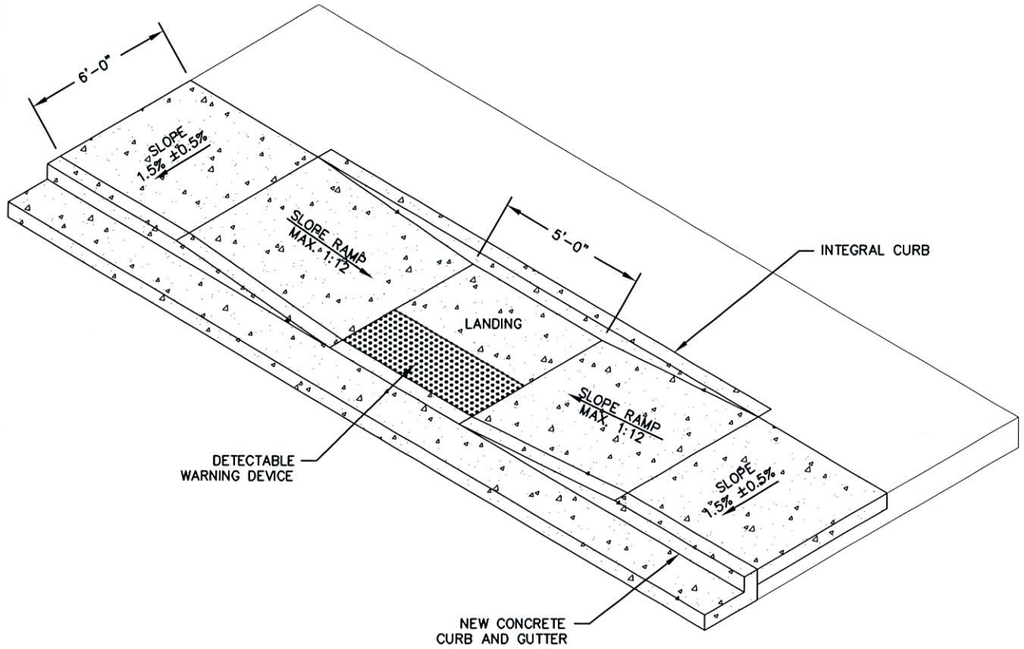

TYPE "A" CURB RAMP DETAIL
NO SCALE

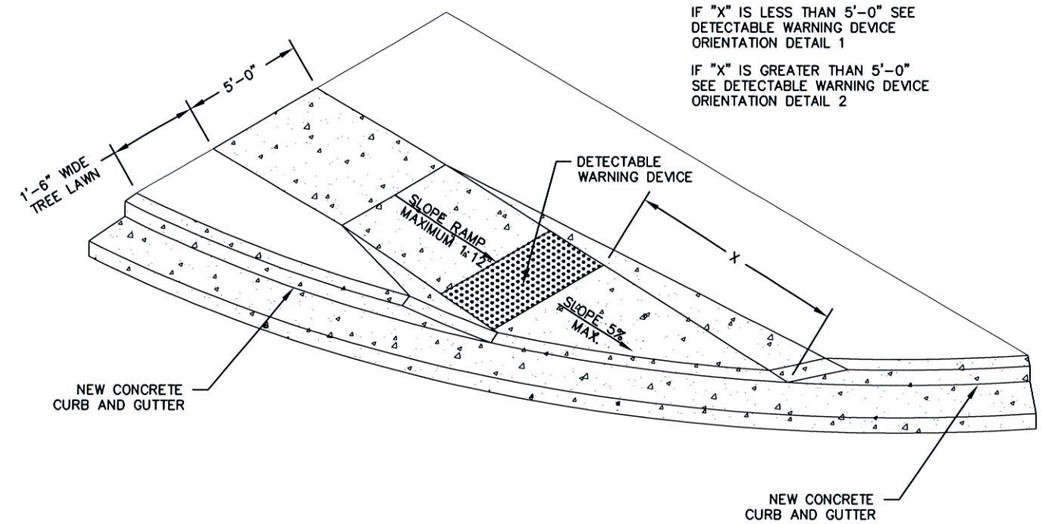

TYPE "C" CURB RAMP DETAIL
NO SCALE

NOTES:

ALL RAMPS SHALL BE IN ACCORDANCE WITH ADA STANDARDS.

MAXIMUM RAMP LENGTH SHALL BE 15'.

INSTALL DETECTABLE WARNING DEVICE IN ACCORDANCE WITH ADA STANDARDS AT PUBLIC STREET INTERSECTIONS AND ANY SIGNALIZED INTERSECTION.

THE CROSS SLOPE OF LANDINGS OF RAMPS SHALL BE 1.5% (2% MAX.) IN ANY DIRECTION. LANDINGS SHALL BE A MINIMUM 5' X 5'.

CROSS SLOPES OF RAMPS AND SIDEWALKS SHALL BE 1.5% (2% MAX.)

CURB RAMPS AND INTEGRAL CURBS THAT ARE PART OF CURB RAMPS SHALL BE INCLUDED IN THE UNIT BID PRICE FOR CONCRETE SIDEWALK, PER SQUARE FOOT.

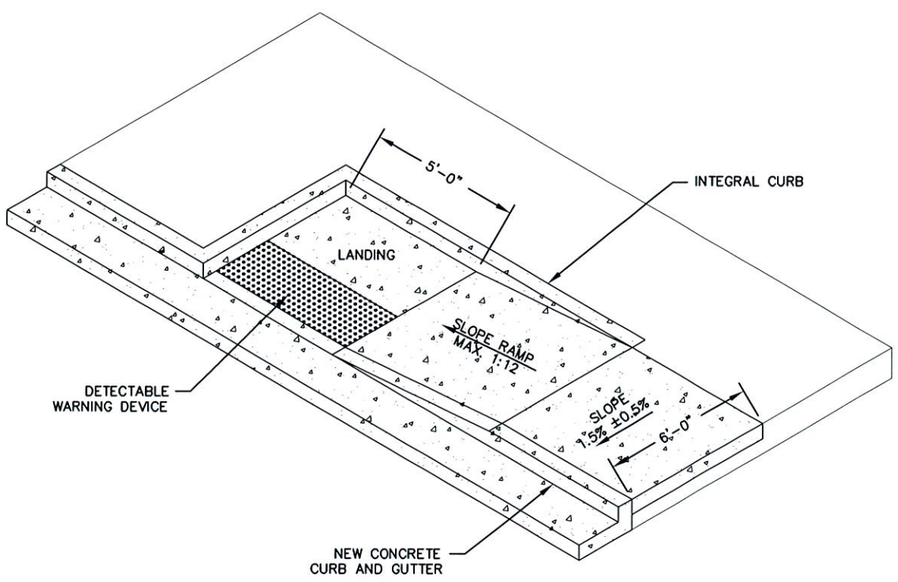

TYPE "B" CURB RAMP DETAIL
NO SCALE

COCHRAN
530A E. Independence Dr.
Union, Missouri 63084
636-584-0540 (tel.)
636-584-0512 (fax)
moll@cochranengr.com
• Civil Engineering
• Land Surveying
• Architecture
• Site Development
• General Consulting
• Master Planning

Two working days prior to the start of any excavation on this site, contractor shall call 1-800-DIG-RITE for utility location information.

All OSHA rules & regulations established for the type of construction required by these plans shall be strictly followed (ie. Trenching, Blasting, etc.)

MILLER STREET PHASE 2 IMPROVEMENTS
FEDERAL PROJECT NO. STP-5401(632)
NEW HAVEN, MISSOURI

DATE:	REVISION:	DWN. BY:	APPD. BY:

STATE OF MISSOURI
TARY TODD
NUMBER
E-24182
REGISTERED PROFESSIONAL ENGINEER
2/24/11

DWN. BY: M.R.B.
APPD. BY: T.D.T.
DATE: FEBRUARY 2011
SCALE: NOT TO SCALE
PROJ. NO: SC10-224
DWG. NO: DE-4

RAMP DETAILS

Drawing name: J:\SC10-221\DETAILS_PH 2.dwg Tab: DE-4 Plotted on: Feb 24, 2011 - 8:14am Plotted by: mspalding

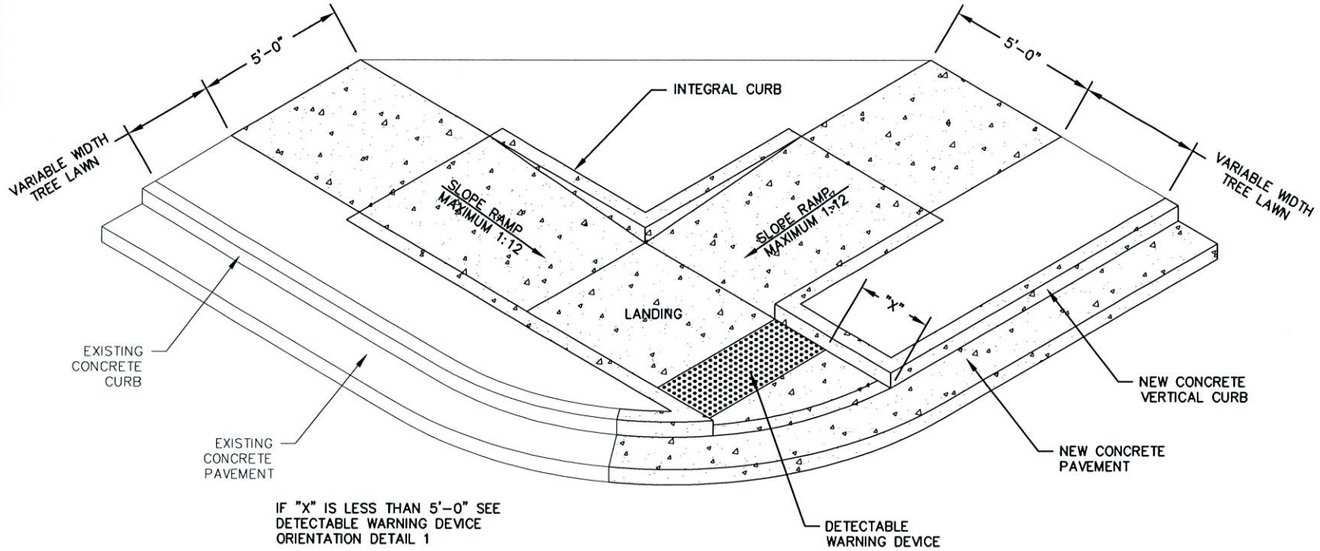

IF "X" IS LESS THAN 5'-0" SEE DETECTABLE WARNING DEVICE ORIENTATION DETAIL 1

IF "X" IS GREATER THAN 5'-0" SEE DETECTABLE WARNING DEVICE ORIENTATION DETAIL 2

TYPE "D" CURB RAMP DETAIL

NO SCALE

NOTES:

ALL RAMPS SHALL BE IN ACCORDANCE WITH ADA STANDARDS.

MAXIMUM RAMP LENGTH SHALL BE 15'.

INSTALL DETECTABLE WARNING DEVICE IN ACCORDANCE WITH ADA STANDARDS AT PUBLIC STREET INTERSECTIONS AND ANY SIGNALIZED INTERSECTION.

THE CROSS SLOPE OF LANDINGS OF RAMPS SHALL BE 1.5% (2% MAX.) IN ANY DIRECTION. LANDINGS SHALL BE A MINIMUM 5' X 5'.

CROSS SLOPES OF RAMPS AND SIDEWALKS SHALL BE 1.5% (2% MAX.)

CURB RAMPS AND INTEGRAL CURBS THAT ARE PART OF CURB RAMPS SHALL BE INCLUDED IN THE UNIT BID PRICE FOR CONCRETE SIDEWALK, PER SQUARE FOOT.

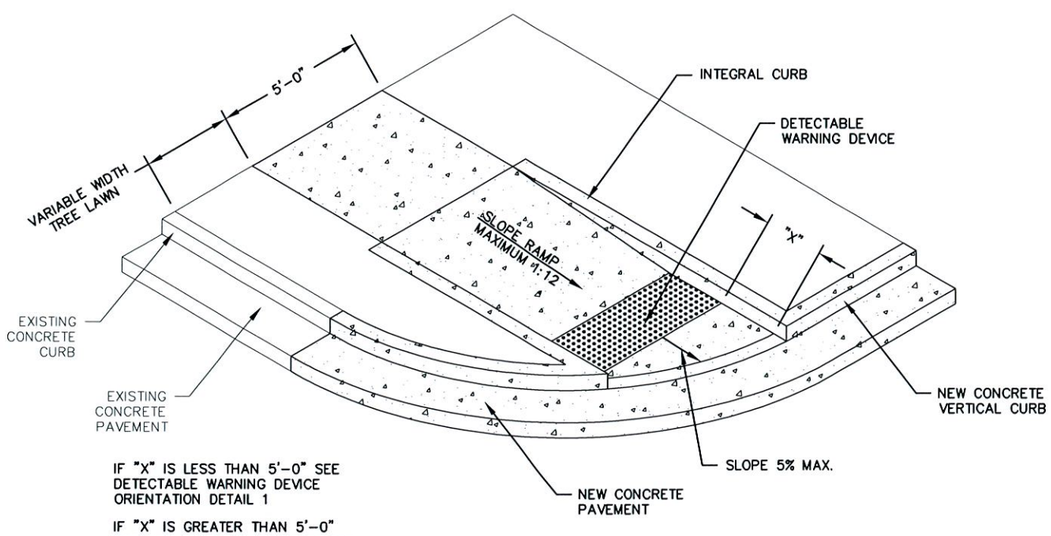

IF "X" IS LESS THAN 5'-0" SEE DETECTABLE WARNING DEVICE ORIENTATION DETAIL 1

IF "X" IS GREATER THAN 5'-0" SEE DETECTABLE WARNING DEVICE ORIENTATION DETAIL 2

TYPE "E" CURB RAMP DETAIL

NO SCALE

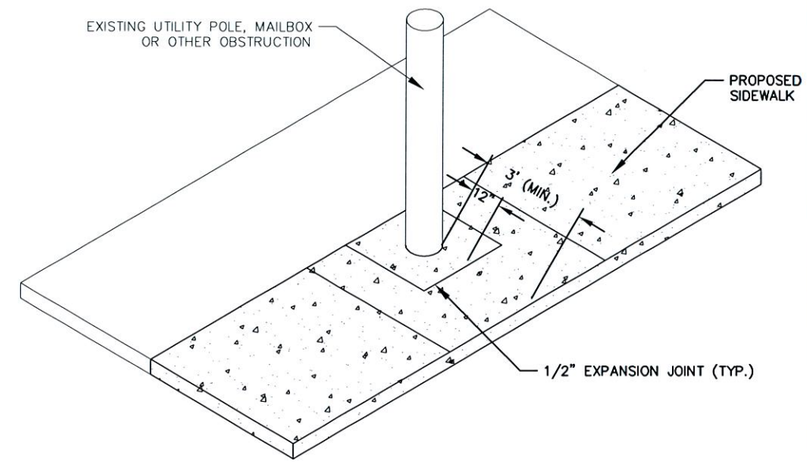

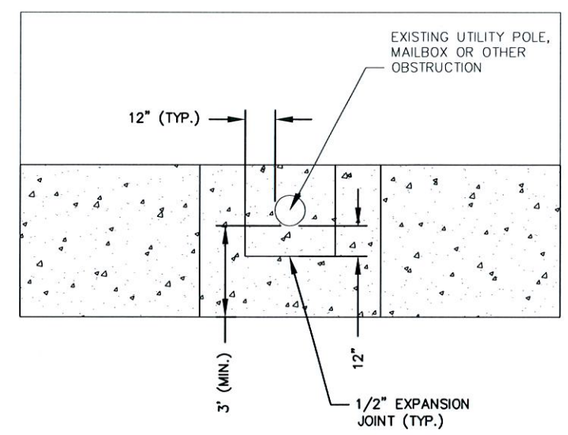

SIDEWALK SECTION AT OBSTRUCTION

NO SCALE

STATE OF MISSOURI
TARY TODD
NUMBER
E-24182
REGISTERED PROFESSIONAL ENGINEER
2/24/11

530A E. Independence Dr.
Union, Missouri 63084
636-584-0540 (tel.)
636-584-0512 (fax)
mail@cochranengineering.com
COCHRAN
• Civil Engineering
• Land Surveying
• Architecture
• Site Development
• General Consulting
• Master Planning

Two working days prior to the start of any excavation on this site, contractor shall call Missouri One Call for utility location information.

All OSHA rules & regulations established for the type of construction required by these plans shall be strictly followed (i.e. Trenching, Blasting, etc.)

MILLER STREET PHASE 2 IMPROVEMENTS

FEDERAL PROJECT NO. STP-5401(632)

NEW HAVEN, MISSOURI

DATE:	REVISION:	DWN. BY:	APPD. BY:

DWN. BY: M.R.B. APPD. BY: T.D.T.

DATE: FEBRUARY 2011

SCALE: NOT TO SCALE

PROJ. NO: SC10-224

DWG. NO: DE-5

RAMP DETAILS

Drawing name: J:\SC10-221\DETAILS_PH 2.dwg Tab: DE-5 Plotted on: Feb 24, 2011 - 8:14am Plotted by: mspalding

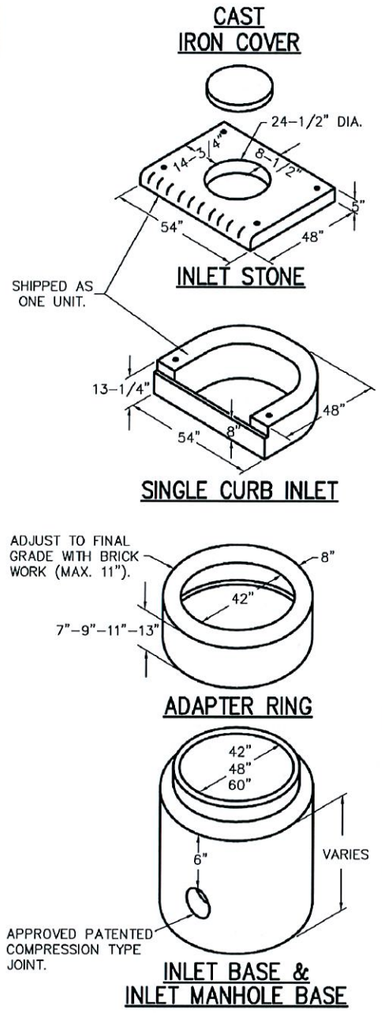

CURB INLET DETAIL
NO SCALE

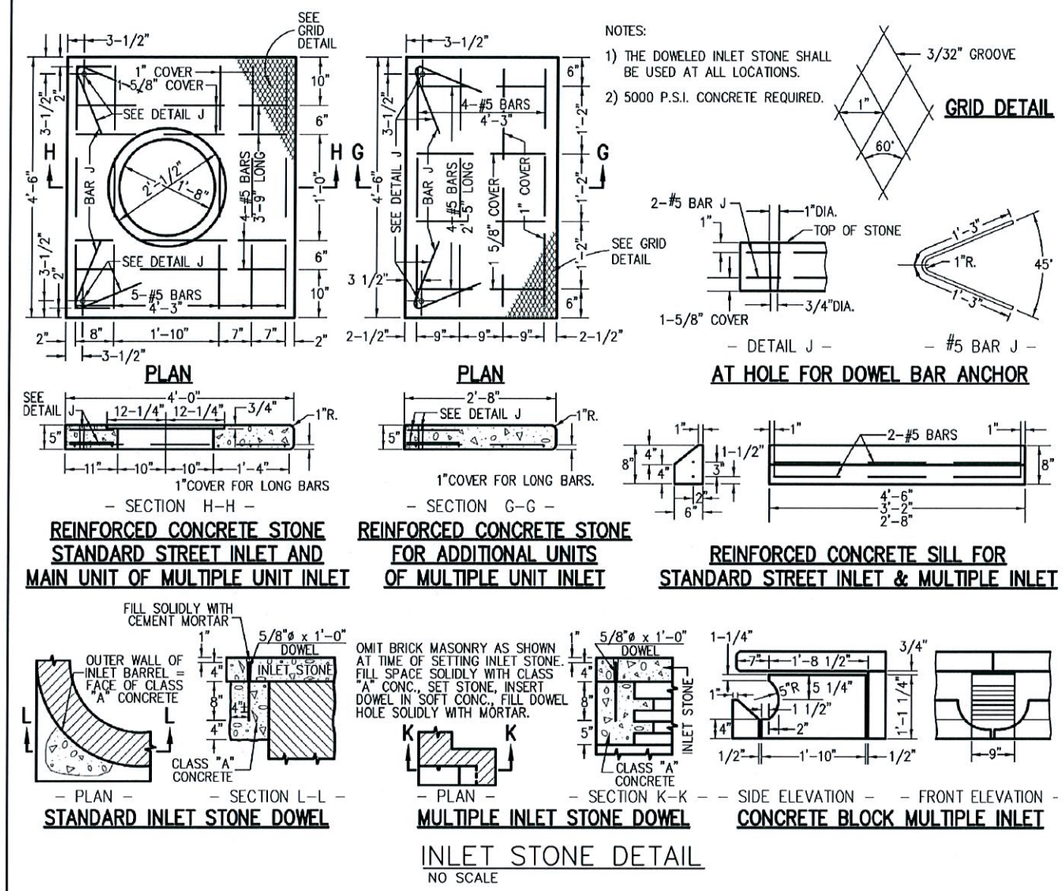

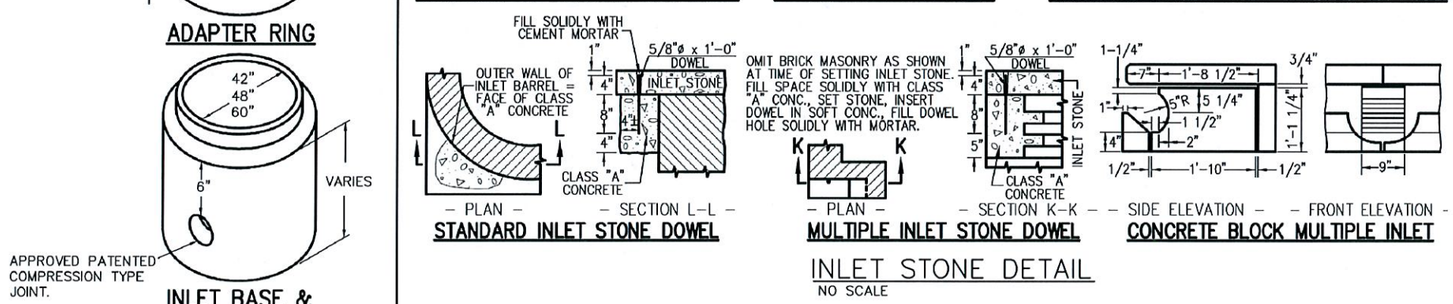

INLET STONE DETAIL
NO SCALE

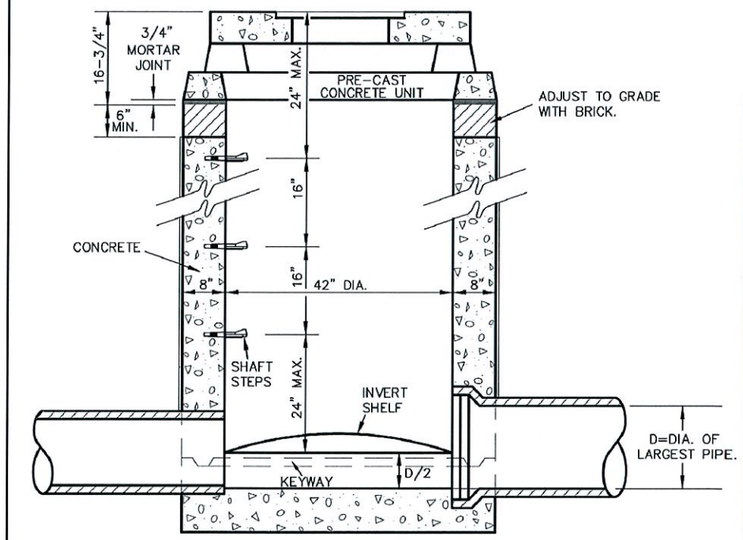

INLET BASE DETAIL
NO SCALE

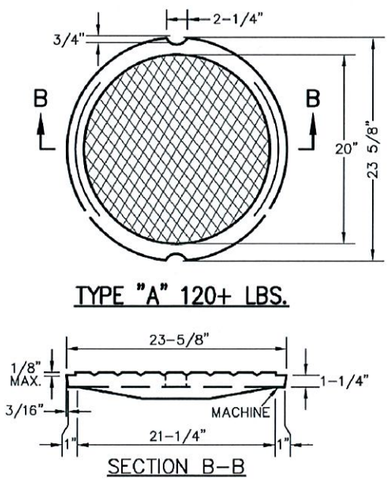

CAST IRON COVER DETAIL
NO SCALE

1. ALL TRENCHES SHALL HAVE A BEDDING OF WELL GRADED, 1" MINUS, GRANULAR MATERIAL FROM 4" BELOW THE BOTTOM OF THE PIPE.
2. IN AREAS TO BE PAVED OVER, ENTIRE TRENCH TO BE BACKFILLED WITH WELL GRADED GRANULAR MATERIAL & COMPACTED TO 95% OF THE STANDARD PROCTOR DENSITY.
3. IN AREAS OF CLEAN DIRT CUTS OUTSIDE OF PAVED AREAS, TRENCH MAY BE BACKFILLED WITH SAME MATERIAL AND COMPACTED TO 95% OF THE STANDARD PROCTOR DENSITY.
4. IN AREAS OF ROCK CUT, THE TRENCH SHALL BE BACKFILLED WITH WELL GRADED GRANULAR MATERIAL TO 6" ABOVE TOP OF PIPE.
5. BACKFILL SHALL BE HOLLOWED OUT FOR PIPE JOINTS AND FITTINGS. PIPE JOINTS ARE UNSUPPORTED.
6. INSTALLATION OF STORM SEWER TO MEET WITH MANUFACTURER'S SPECIFICATIONS.
7. ALL STORM SEWER STRUCTURES TO MEET WITH THE CITY OF NEW HAVEN SPECIFICATIONS.

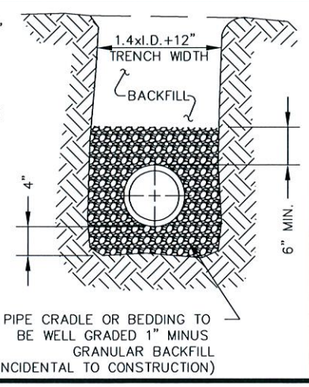

STORM SEWER TRENCHING DETAIL
NO SCALE

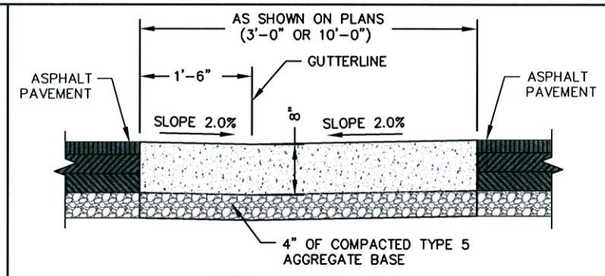

NOTE:
CONCRETE SHALL BE HIGH EARLY, 3,500 PSI AT 2 DAYS.

CONCRETE SWALE
NO SCALE

530A E. Independence Dr.
Union, Missouri 63084
636-584-0540 (tel.)
636-584-0512 (fax)
mail@cochranengineering.com
COCHRAN
• Civil Engineering
• Land Surveying
• Architecture
• Site Development
• Energy Consulting
• Master Planning

Two working days prior to the start of any excavation on this site, contractor shall call Missouri One Call for utility location information.

All OSHA rules & regulations established for the type of construction required by these plans shall be strictly followed (i.e. trenching, shoring, etc.)

MILLER STREET PHASE 2 IMPROVEMENTS
FEDERAL PROJECT NO. STP-5401(632)
NEW HAVEN, MISSOURI

DATE:	REVISION:	DWN. BY:	APPD. BY:

STORM SEWER DETAILS

DWN. BY: M.R.B.	APPD. BY: T.D.T.
DATE: FEBRUARY 2011	
SCALE: NOT TO SCALE	
PROJ. NO: SC10-224	
DWG. NO: DE-6	

Drawing name: J:\SC10-221\DETAILS_PH 2.dwg Tab: DE-6 Plotted on: Feb 24, 2011 - 8:14am Plotted by: mspalding

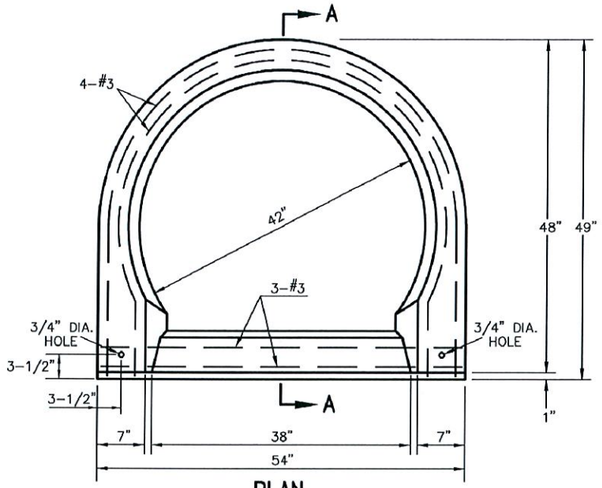

PLAN

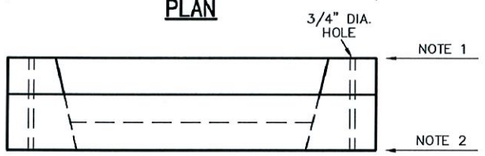

ELEVATION

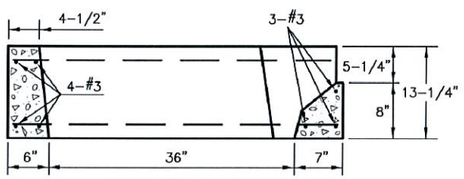

SECTION A–A

NOTES:

1) SET STANDARD INLET STONE IN 3/4" MORTAR BED AND DOWEL WITH 5/8" DIA. 1'–0" LONG PINS AND GROUT.
2) RAISE TO FINAL GRADE WITH COURSES OF BRICK AND SET THE UNIT TO BASE WITH 3/4" MORTAR BED.
3) THIS UNIT IS TO BE USED WITH 42 INCH I.D. POURED–IN–PLACE CONCRETE OR BRICK BASE.
4) 5000 P.S.I. CONCRETE IS REQUIRED.

SINGLE CURB INLET DETAIL

NO SCALE

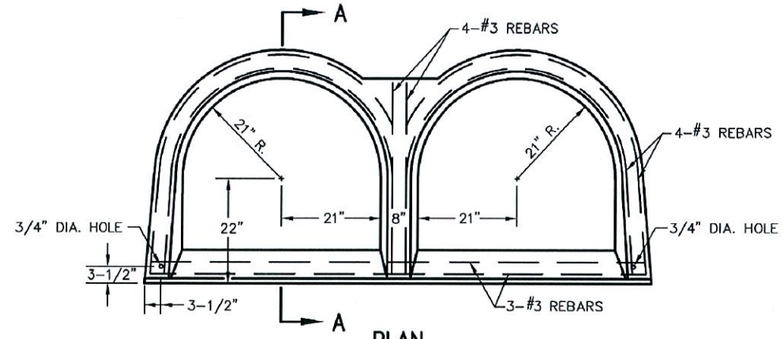

PLAN

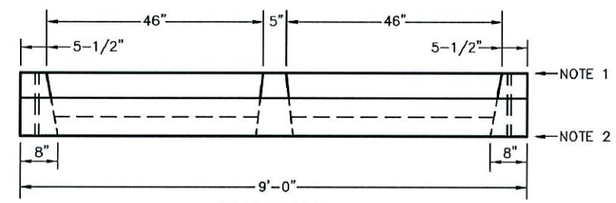

ELEVATION

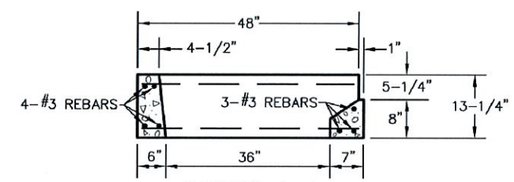

SECTION A–A

NOTES:

1) SET TWO (2) STANDARD INLET STONES IN 3/4" MORTAR BED AND DOWEL WITH 5/8" DIA. 1'–0" LONG PINS AND GROUT.
2) RAISE TO FINAL GRADE WITH COURSES OF BRICK AND SET THE UNIT TO BASE WITH 3/4" MORTAR BED.
3) THIS UNIT IS TO BE USED WITH POURED–IN–PLACE CONCRETE BASE.
4) 5000 P.S.I. CONCRETE REQUIRED.
5) 1 INCH CLEARANCE, ALL REINFORCEMENT.

DOUBLE CURB INLET DETAIL

NO SCALE

STATE OF MISSOURI
TARY TODD
NUMBER
E-24182
REGISTERED PROFESSIONAL ENGINEER
2/24/11

COCHRAN
530A E. Independence Dr.
Union, Missouri 63084
636–584–0540 (tel.)
636–584–0512 (fax)
mail@cochranengineering.com
• Civil Engineering
• Land Surveying
• Architecture
• Site Development
• General Consulting
• Master Planning

Two working days prior to the start of any excavation on this site contact utility location information.

All OSHA rules & regulations established for the type of construction required by these plans shall be strictly followed (i.e. trenching, blasting, etc.)

MILLER STREET PHASE 2 IMPROVEMENTS
FEDERAL PROJECT NO. STP-5401(632)
NEW HAVEN, MISSOURI

STORM SEWER DETAILS

DATE:	REVISION:	DWN. BY:	APP'D. BY:

DWN. BY: M.R.B.
APP'D. BY: T.D.T.
DATE: FEBRUARY 2011
SCALE: NOT TO SCALE
PROJ. NO: SC10–224
DWG. NO: DE-7

Drawing name: J:\SC10-221\DETAILS_PH 2.dwg Tab: DE-7 Plotted on: Feb 24, 2011 - 8:15am Plotted by: mspalding

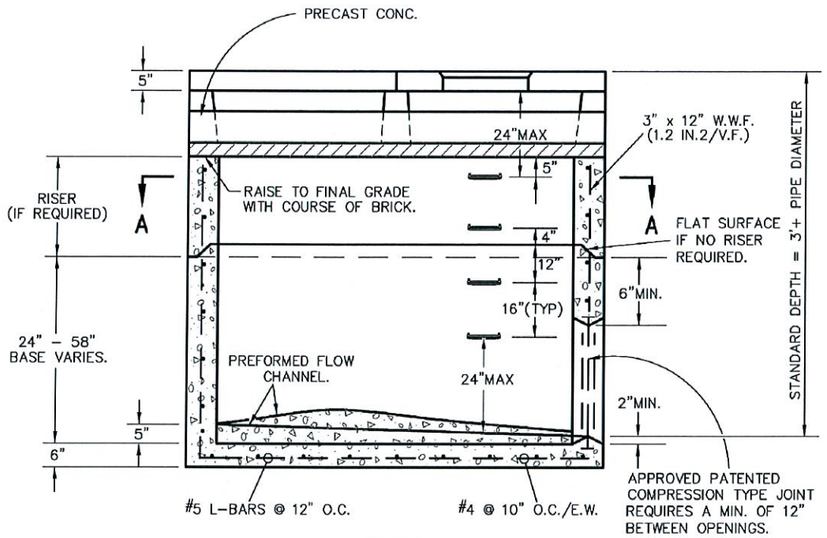

PLAN

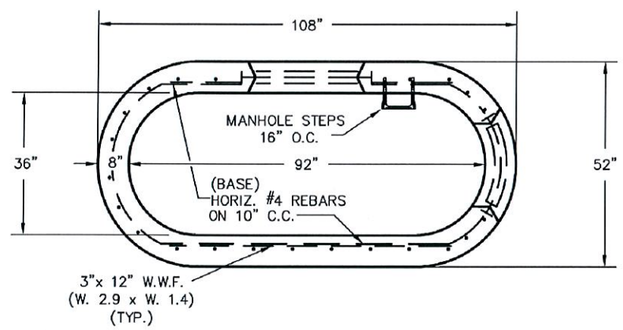

SECTION A-A

NOTE:

33 INCH R.C.P. MAXIMUM PIPES FRONT & BACK WALLS AND 24 INCH R.C.P. MAXIMUM PIPE FOR ENDS WITH A MINIMUM OF 12 INCHES BETWEEN PIPES.

DOUBLE CURB INLET BASE DETAIL

NO SCALE

STATE OF MISSOURI
TARY TODD
NUMBER
E-24182
REGISTERED PROFESSIONAL ENGINEER
2/24/11

COCHRAN
530A E. Independence Dr.
Union, Missouri 63084
636-584-0540 (tel.)
636-584-0512 (fax)
mail@cochraneng.com
• Civil Engineering
• Land Surveying
• Architecture
• Site Development
• General Consulting
• Master Planning

Two working days prior to the start of any excavation in the state of missouri call 1-800-DIG-RITE (or utility location information.

All OSHA rules & regulations established for the type of construction required by these plans shall be strictly followed (ie. Trenching, Blasting, etc.)

MILLER STREET PHASE 2 IMPROVEMENTS

FEDERAL PROJECT NO. STP-5401(632)

NEW HAVEN, MISSOURI

STORM SEWER DETAILS

DATE:	REVISION:	DWN. BY:	APPD. BY:

DWN. BY: M.R.B.	APPD. BY: T.D.T.
DATE: FEBRUARY 2011	
SCALE: NOT TO SCALE	
PROJ. NO: SC10-224	
DWG. NO: DE-8	

Drawing name: J:\SC10-221\DETAILS_PH 2.dwg Tab: DE-8 Plotted on: Feb 24, 2011 - 8:15am Plotted by: mspalding

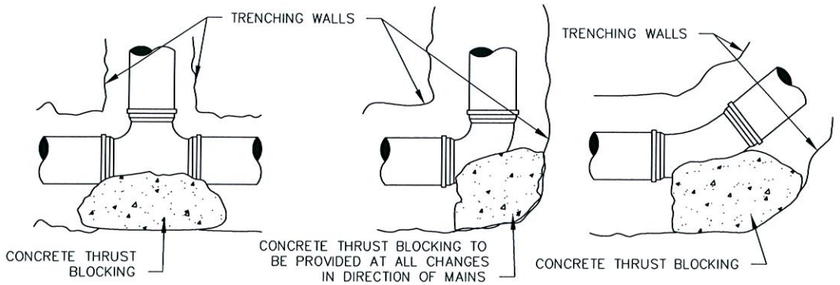

SQ. FT. OF THRUST BLOCK AREA REQUIRED				
PIPE SIZE	DEAD END TEE OR IN-LINE VLV.	90° ELBOW	45° ELBOW	22-1/2" ELBOW
4"	MIN.	MIN.	MIN.	MIN.
6"	MIN.	MIN.	MIN.	MIN.
8"	2'3"x 2'3"	2'8"x 2'8"	MIN.	MIN.
10"	2'10"x 2'10"	3'6"x 3'6"	2'6"x 2'6"	MIN.

MIN. THRUST BLOCK BEARING TO BE 2 SQ. FT

THRUST BLOCKING DETAIL
NO SCALE

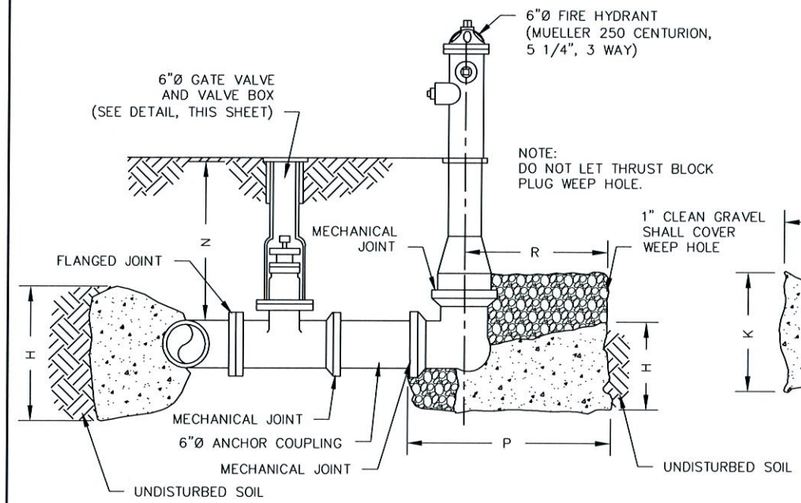

SECTION VIEW

FIRE HYDRANT THRUST BLOCK DIMENSIONS							
D	K	V	M	H	N	P	R
6"	28"	6"	24"	24"	42"	36"	30"

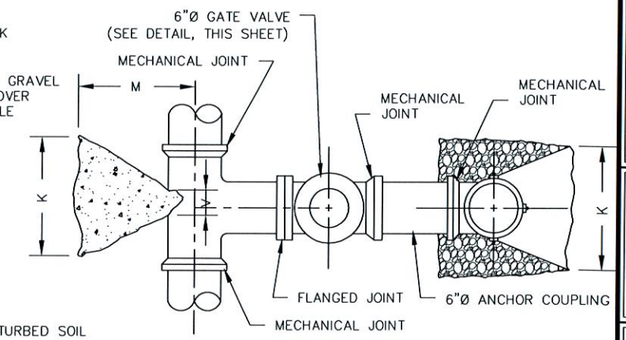

PLAN VIEW–FIRE HYDRANT, AUXILIARY VALVE AND VALVE BOX

PLAN VIEW

FIRE HYDRANT ASSSEMBLY DETAIL
NO SCALE

1. Backfill material for water main shall be suitable earth, free from large rocks or stones.

2. All trenches in areas of unsuitable earth used for water main shall have a bedding of well-graded, 1" minus, granular backfill from 4" below the bottom of the pipe to one-half the diameter of the pipe compacted to 95% of the Standard Proctor Density.

3. In areas of clean dirt cuts outside of paved areas, trench may be backfilled with same material and compacted to 95% of the Standard Proctor Density.

4. In areas of rock cut, the trench shall be backfilled with well-graded granular compacted material to six inches above top of pipe.

5. Contractor shall be responsible for trench settlement.

6. Well-graded 1" minus granular compacted backfill to be used in all areas to be paved.

7. Locator wire shall be #12 copper wire, solid insulated for 600 v. with splice points at valve boxes.

8. Locator wire to be tested prior to backfill.

9. Tracer tape shall be 3" wide, bonded layer plastic with magnetic foil core and shall have the words "Caution: WATER MAIN BURIED BELOW"

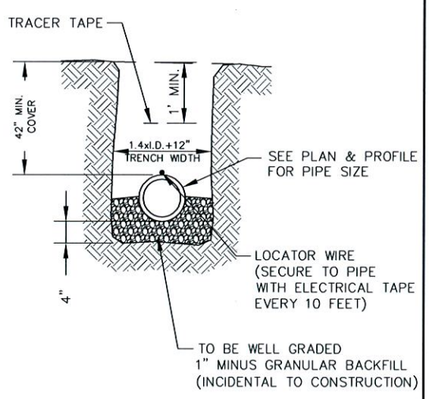

WATER MAIN TRENCHING DETAIL
NO SCALE

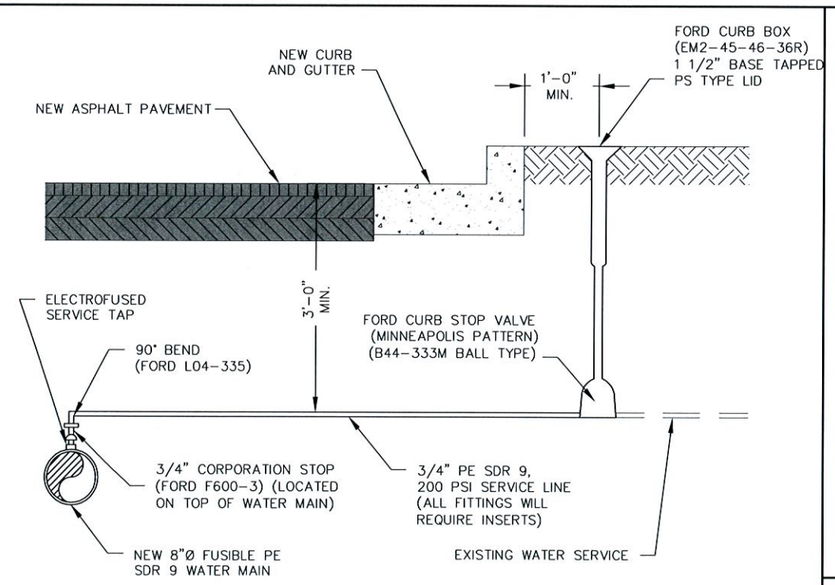

NOTE:
LOCATOR WIRE SHALL BE PLACED ALONG SERVICE LINES TO CURB STOP (TYP.)

WATER SERVICE CONNECTION DETAIL
NO SCALE

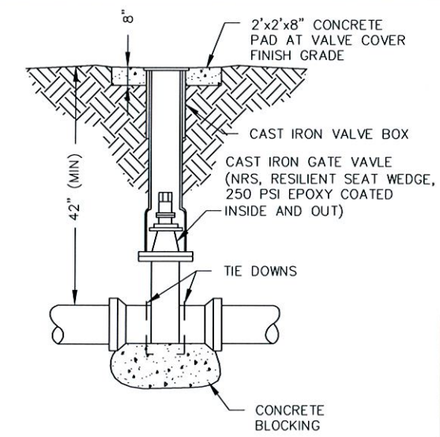

GATE VALVE & VALVE BOX DETAIL
NO SCALE

STATE OF MISSOURI
TARY TODD
NUMBER E-24182
REGISTERED PROFESSIONAL ENGINEER
2/24/11

530A E. Independence Dr.
Union, Missouri 63084
636-584-0540 (tel.)
636-584-0512 (fax)
mail@cochraneng.com
COCHRAN
• Civil Engineering
• Land Surveying
• Architecture
• Site Development
• General Consulting
• Master Planning

Two working days prior to the start of any excavation on this site, contractor shall call 1-800-DIG-RITE for utility location information.

All OSHA rules & regulations established for the type of construction involved shall be strictly followed (ie. Trenching, Blasting, etc.)

MILLER STREET PHASE 2 IMPROVEMENTS
FEDERAL PROJECT NO. STP-5401(632)
NEW HAVEN, MISSOURI

DATE:	REVISION:	DWN. BY:	APPD. BY:

WATERLINE DETAILS

DWN. BY:	APPD. BY:
M.R.B.	T.D.T.

DATE: FEBRUARY 2011
SCALE: NOT TO SCALE
PROJ. NO: SC10-224
DWG. NO: DE-9

Drawing name: J:\SC10-221\DETAILS_PH 2.dwg Tab: DE-9 Plotted on: Feb 24, 2011 - 8:15am Plotted by: mspalding

1. Backfill material for gas main shall be suitable earth, free from large rocks or stones.

2. All trenches in areas of unsuitable earth used for gas main shall have a bedding of clean sand backfill from 6" below the bottom of the pipe to 12" above the top of the pipe compacted to 95% of the Standard Proctor Density.

3. In areas of clean dirt cuts outside of paved areas, trench may be backfilled with same material and compacted to 95% of the Standard Proctor Density.

4. Contractor shall be responsible for trench settlement.

5. Well-graded 1" minus granular compacted backfill to be used in all areas to be paved. Incidental to construction.

6. Locator wire shall be #12 copper wire, solid insulated for 600 v. with splice points at valve boxes.

7. Locator wire to be tested prior to backfill.

8. Tracer tape shall be 3" wide, bonded layer plastic with magnetic foil core and shall have the words "Caution: GAS MAIN BURIED BELOW"

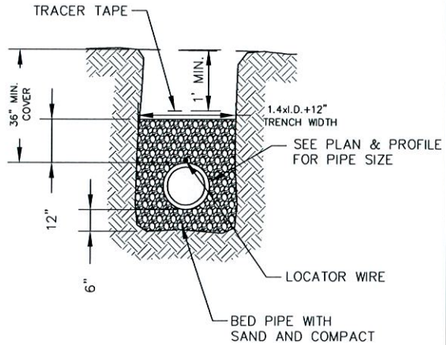

GAS MAIN TRENCHING DETAIL

NO SCALE

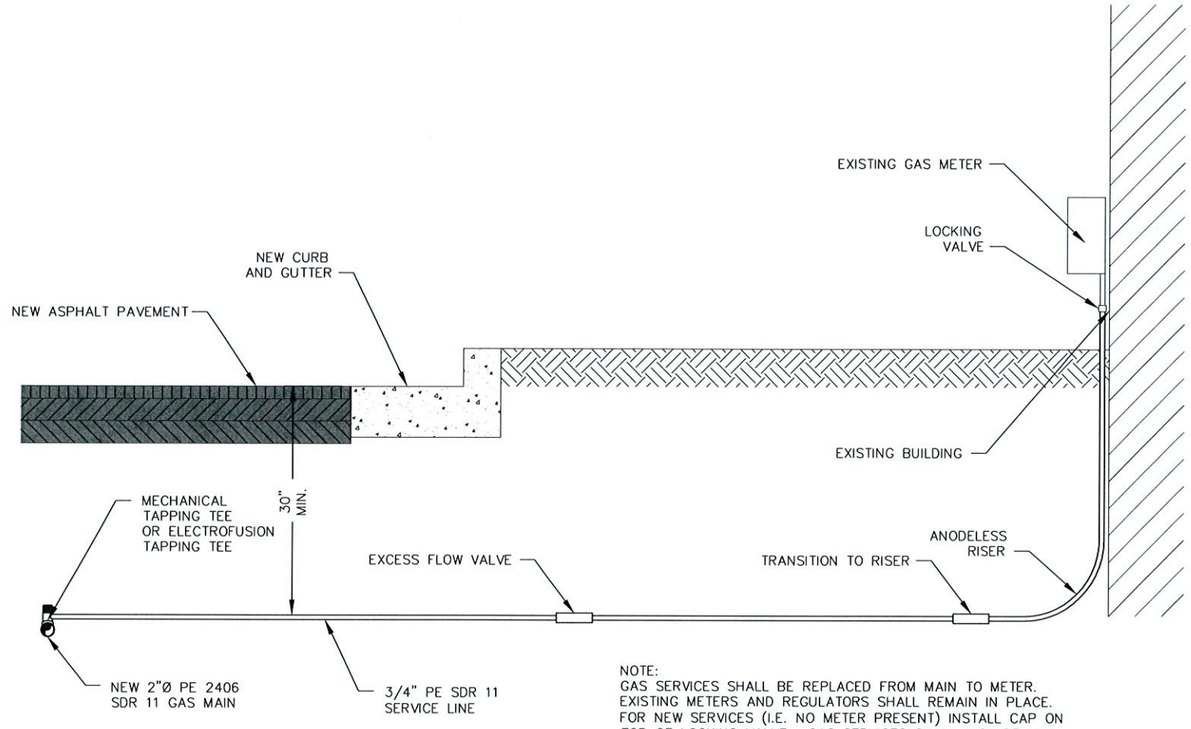

NOTE:
GAS SERVICES SHALL BE REPLACED FROM MAIN TO METER. EXISTING METERS AND REGULATORS SHALL REMAIN IN PLACE. FOR NEW SERVICES (I.E. NO METER PRESENT) INSTALL CAP ON TOP OF LOCKING VALVE. GAS SERVICES SHALL INCLUDE ANY NECESSARY BLACK IRON FITTINGS AND MATERIALS TO ADJUST HEIGHT TO MAKE CONNECTION AT THE METER. LOCATOR WIRE SHALL BE INSTALLED WITH THE SERVICE LINES.

GAS SERVICE CONNECTION DETAIL

NO SCALE

STATE OF MISSOURI
TARY TODD
NUMBER
E-24182
REGISTERED PROFESSIONAL ENGINEER
2/24/11

530A E. Independence Dr.
Union, Missouri 63084
636-584-0540 (tel.)
636-584-0553 (fax)
mail@cochranengineering.com
COCHRAN
• Civil Engineering
• Land Surveying
• Architecture
• Site Development
• General Consulting
• Master Planning

Two working days prior to the start of any excavation on this site, contractor shall call 1-800-DIGGERS for utility location information.

All OSHA rules & regulations established for the type of construction required by these plans shall be strictly followed (ie. Trenching, Blasting, etc.)

MILLER STREET PHASE 2 IMPROVEMENTS
FEDERAL PROJECT NO. STP-5401(632)
NEW HAVEN, MISSOURI

DATE:	REVISION:	DWN. BY:	APP'D. BY:

GAS MAIN DETAILS

DWN. BY: M.R.B. APP'D. BY: T.D.T.
DATE: FEBRUARY 2011
SCALE: NOT TO SCALE
PROJ. NO: SC10-224
DWG. NO: DE-10

Drawing name: J:\SC10-221\DETAILS_PH 2.dwg Tab: DE-10 Plotted on: Feb 24, 2011 - 8:15am Plotted by: mspalding

W11-2
MINIMUM SIGN SIZE
24"x24"

W16-9p
MINIMUM SIGN SIZE
24"x12"

"CROSSWALK" WITH "AHEAD" SIGN DETAIL

NO SCALE

W11-1
MINIMUM SIGN SIZE
24"x24"

W16-1
MINIMUM SIGN SIZE
18"x24"

"BIKE" WITH "SHARE THE ROAD" SIGN DETAIL

NO SCALE

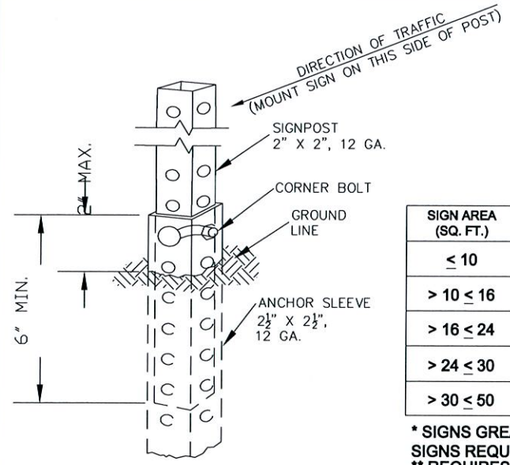

THE SIGN POST IS ATTACHED TO THE ANCHOR SLEEVE WITH THE CORNER BOLT PER MANUFACTURER'S SPECIFICATION.

SIGN AREA (SQ. FT.)	POST TYPE		
	U-CHANNEL	WOOD	PERF. SQUARE STEEL TUBING
≤ 10	1 - 3.0 LB/FT *	1 - 4" x 4" *	1 - 2", 12 GA *
> 10 ≤ 16	2 - 3.0 LB/FT	2 - 4" x 4" 1 - 4" x 6" *	2 - 2", 12 GA
> 16 ≤ 24	3 - 3.0 LB/FT	2 - 4" x 6"	3 - 2", 12 GA **
> 24 ≤ 30	4 - 3.0 LB/FT	2 - 4" x 6"	N/A
> 30 ≤ 50	N/A	2 - 6" x 6"	N/A

* SIGNS GREATER THAN 4 FT. IN WIDTH, EXCEPT DIAMOND SHAPE SIGNS REQUIRE 2 POSTS.
** REQUIRES SLIP BASE PER MANUFACTURER'S RECOMMENDATION.

PERFORATED SQUARE STEEL TUBE POST

NO SCALE

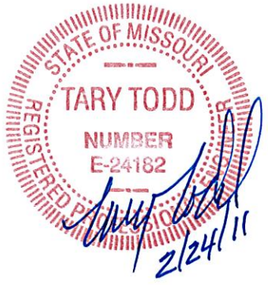

530A E. Independence Dr.
Union, Missouri 63084
636-584-0540 (tel.)
636-584-0512 (fax)
moliff@ochranengr.com
OCHRAN
• Civil Engineering
• Land Surveying
• Architecture
• Site Development
• General Consulting
• Master Planning

Two working days prior to the start of any excavation on this site, contractor shall call 1-800-DIG-RITE for utility location information.

All OSHA rules & regulations established for the type of construction required by these plans shall be strictly followed (ie. Trenching, Blasting, etc.)

MILLER STREET PHASE 2 IMPROVEMENTS
FEDERAL PROJECT NO. STP-5401(632)
NEW HAVEN, MISSOURI

SIGNAGE DETAILS

DATE:	REVISION:	DWN. BY:	APP'D. BY:

DWN. BY: M.R.B.
APP'D. BY: T.D.T.
DATE: FEBRUARY 2011
SCALE: NOT TO SCALE
PROJ. NO: SC10-224
DWG. NO: DE-11

Drawing name: J:\SC10-221\DETAILS_PH 2.dwg Tab: DE-11 Plotted on: Feb 24, 2011 - 8:15am Plotted by: mspalding

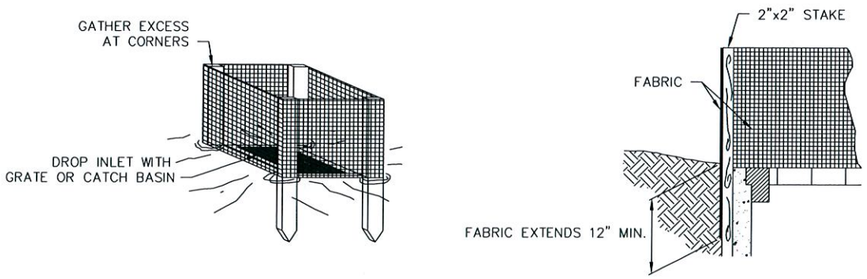

SILT FENCE INLET PROTECTION

NO SCALE

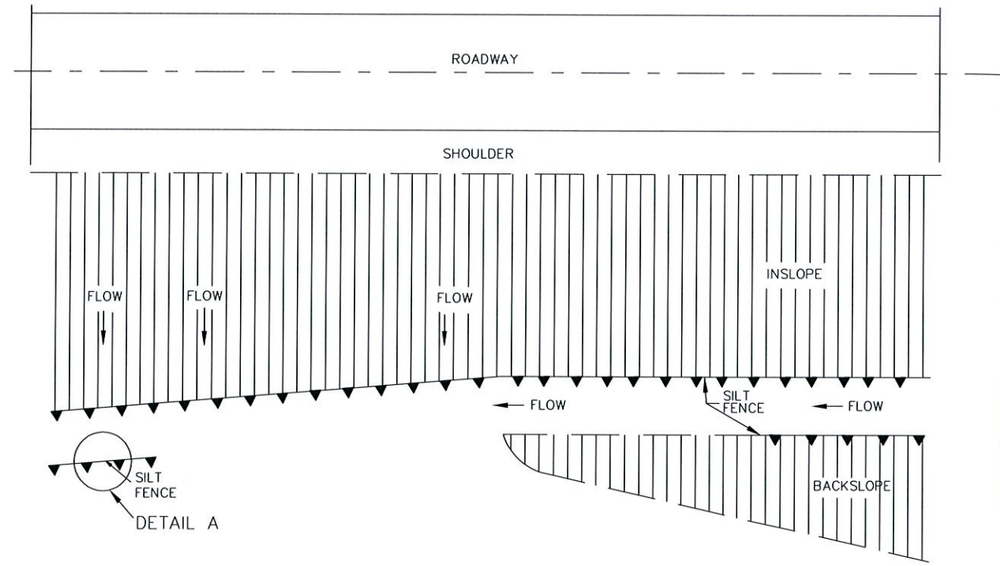

GENERAL NOTES:

USE SILT FENCE FOR ALL FILL SLOPES.

FOR FABRIC SILT FENCE:

MINIMUM LONGITUDINAL SPLICE OVERLAP SHALL BE 2' WITH A POST AT EACH END.

SECURE FABRIC TO POSTS.

SILT FENCE SHALL NOT BE USED ACROSS DRAINAGE DITCHES AND DRAINS, DITCH CHECK SHALL BE USED AS SHOWN ON PLANS OR AS DIRECTED BY ENGINEER.

CONTRACTOR TO USE AN INLET CHECK TO PREVENT ANY SILT OR DEBRIS GETTING INTO ANY NEW OR EXISTING CURB INLETS DURING CONSTRUCTION.

GENERAL NOTES:

1. SILTATION CONTROL DEVICES TO REMAIN IN PLACE UNTIL ADEQUATE VEGETATIVE GROWTH INSURES NO FURTHER EROSION OF THE SOIL. THE CONTRACTOR SHALL BE RESPONSIBLE FOR REMOVING THE SILT FENCE.
2. SILT FENCES SHALL BE INSPECTED PERIODICALLY FOR DAMAGE AND FOR THE AMOUNT OF SEDIMENTATION WHICH HAS ACCUMULATED. REMOVAL OF SEDIMENT WILL BE REQUIRED WHEN IT REACHES 1/2 OF THE HEIGHT OF THE SILT FENCE.
3. ATTACHMENT OF THE GEOTEXTILE FABRIC TO BE IN ACCORDANCE WITH THE MANUFACTURER'S RECOMMENDATION.
4. SILTATION CONTROL SHALL BE INSTALLED AS SHOWN ON PLANS OR AS DIRECTED BY THE ENGINEER TO ENSURE THAT NO SILT LEAVES THE CONSTRUCTION AREA.

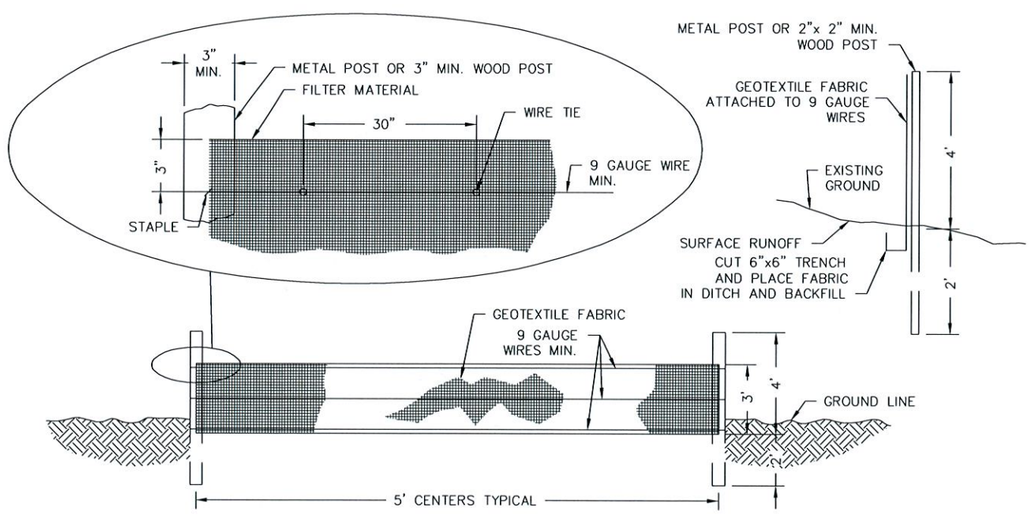

DETAIL A

SILTATION CONTROL DETAILS

NO SCALE

STATE OF MISSOURI
TARY TODD
NUMBER
E-24182
REGISTERED PROFESSIONAL ENGINEER
2/24/11

COCHRAN
12963 Manor Industrial Dr.
Sunset Hills, MO 63127
314-842-4033 (tel.)
314-842-4957 (fax)
david@cochranengineering.com
• Civil Engineering
• Land Surveying
• Architecture
• Site Development
• General Consulting
• Master Planning
CERTIFICATE OF AUTHORITY NUMBER - 006937

Three working days prior to the start of any excavation on this site, contractor shall call 1-800-344-7483 for utility location information.

All OSHA rules & regulations established for the safety of construction required by these plans shall be strictly followed (ie. Trenching, Blasting, etc.)

MILLER STREET PHASE 2 IMPROVEMENTS

FEDERAL PROJECT NO. STP-5401(632)

NEW HAVEN, MISSOURI

DATE:	REVISION:	DWN. BY:	APP'D. BY:

EROSION CONTROL

DWN. BY: M.R.B. APP'D. BY: T.D.T.

DATE: FEBRUARY 2011

SCALE: NO SCALE

PROJ. NO: SC10-224

DWG. NO: *EC-1*

Drawing name: J:\SC10-221\EROSION CONTROL_PH 2.dwg Tab: EC-1 Plotted on: Feb 24, 2011 - 8:15am Plotted by: mspalding

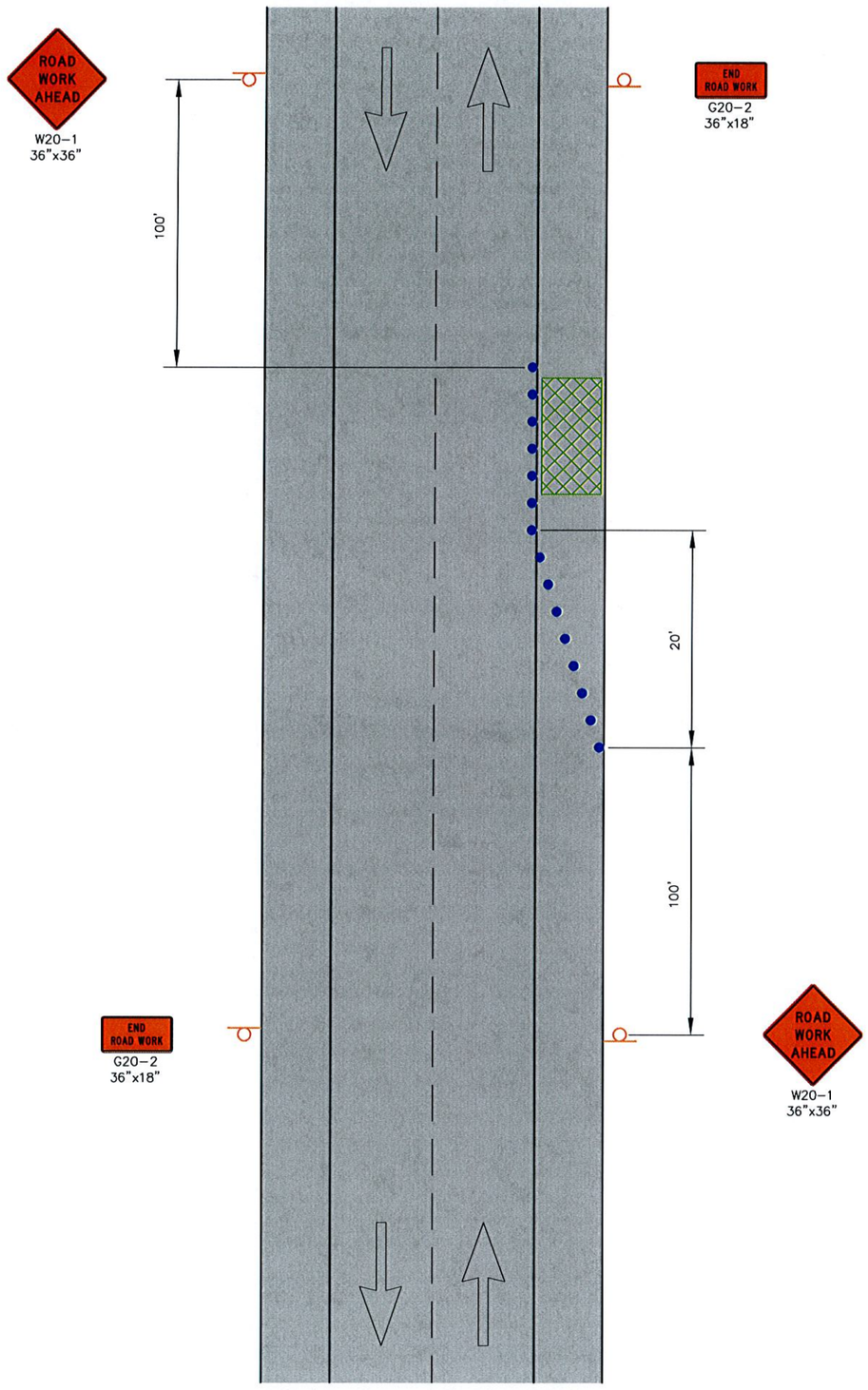

SHOULDER WORK WITH MINOR ENCROACHMENT
NO SCALE

QUANTITY TABLE

ITEM NO.	DESCRIPTION	UNIT	QUANTITY
ITEM NO.	CHANNELIZERS	EA	100
ITEM NO.	"ROAD WORK AHEAD" SIGN (W20-1)	EA	2
ITEM NO.	"END ROAD WORK" SIGN (G20-2)	EA	2

NOTES:

1. TRAFFIC CONTROL SHALL BE MAINTAINED IN ACCORDANCE WITH THE MANUAL ON UNIFORM TRAFFIC CONTROL DEVICES (MUTCD).
2. TEMPORARY PAVEMENT MARKINGS, IF NECESSARY, SHALL BE CONSIDERED AS INCIDENTAL TO THE CONSTRUCTION OF THE PROJECT AND NO DIRECT PAYMENT WILL BE MADE FOR THIS ITEM. PAVEMENT MARKINGS SHALL BE MAINTAINED IN ACCORDANCE WITH PART VI OF THE MUTCD. INTERIM PAVEMENT MARKINGS MAY BE LEFT IN PLACE FOR SITUATIONS OF TWO WEEKS OR LESS.
3. CHANNELIZERS SHALL BE PLACED EVERY 25 FEET UNLESS SHOWN OTHERWISE ON THE PLANS. A MINIMUM 10 FOOT WIDE DRIVING LANE SHALL BE MAINTAINED. CHANNELIZERS SHALL BE PLACED IN OPEN TRENCH DURING NON-WORKING HOURS.
4. IF AN OPEN TRENCH CONDITION WILL REMAIN OPEN OVERNIGHT, "PAVEMENT EDGE TREATMENT" SHALL BE PROVIDED IN ACCORDANCE WITH MODOT STANDARD DRAWING 619.10 AND SHALL BE CONSIDERED INCIDENTAL.
5. ANY EXISTING SIGNS WHICH CONFLICT WITH THE TRAFFIC CONTROL PLAN SHALL BE COVERED.
6. ALL SPACING AND DISTANCES ARE APPROXIMATE AND MAY BE ADJUSTED BY THE ENGINEER TO FIT FIELD CONDITIONS.
7. FOR SHOULDER WORK, USE A FLAGGER WHEN MOVING EQUIPMENT ON AND OFF THE ROADWAY, OTHERWISE OPTIONAL. FOR ANY LANE CLOSURE A FLAGGER IS MANDATORY.
8. PORTABLE STOP SIGNS WILL BE REQUIRED ON ALL APPROACHES DURING TRAFFIC SIGNAL "DOWN TIME".
9. ALL VEHICLES, EQUIPMENT, WORKERS AND THEIR ACTIVITIES SHALL BE RESTRICTED TO ONE SIDE OF THE PAVEMENT.

LEGEND

- CHANNELIZERS (SAFETY CONES, BARRICADES, AND/OR PLASTIC DRUMS)
- INFORMATIONAL SIGNING
- AREA OF CONSTRUCTION

STATE OF MISSOURI
TARY TODD
NUMBER
E-24182
REGISTERED PROFESSIONAL ENGINEER
2/24/11

12963 Maurer Industrial Dr.
Sunset Hills, MO 63127
314-842-4033 (tel.)
314-842-5957 (fax)
david@cochraneng.com
COCHRAN
• Civil Engineering
• Land Surveying
• Architecture
• Site Development
• General Consulting
• Master Planning
CERTIFICATE OF AUTHORITY NUMBER - 006937

Three working days prior to the start of any excavation on this site, contractor shall call 1-800-DIGGERS for utility location information.

All OSHA rules & regulations established for the type of construction required by these plans shall be strictly followed (ie. Trenching, Blasting, etc.)

MILLER STREET PHASE 2 IMPROVEMENTS
FEDERAL PROJECT NO. STP-5401(632)
NEW HAVEN, MISSOURI

DATE:	REVISION:	DWN. BY:	APP'D. BY:

TRAFFIC CONTROL

DWN. BY: M.R.B.
APP'D. BY: T.D.T.
DATE: FEBRUARY 2011
SCALE: NO SCALE
PROJ. NO: SC10-224
DWG. NO: TC-1

Drawing name: J:\SC10-221\TRAFFIC CONTROL_PH 2.dwg Tab: TC-1 Plotted on: Feb 24, 2011 - 8:15am Plotted by: mspalding

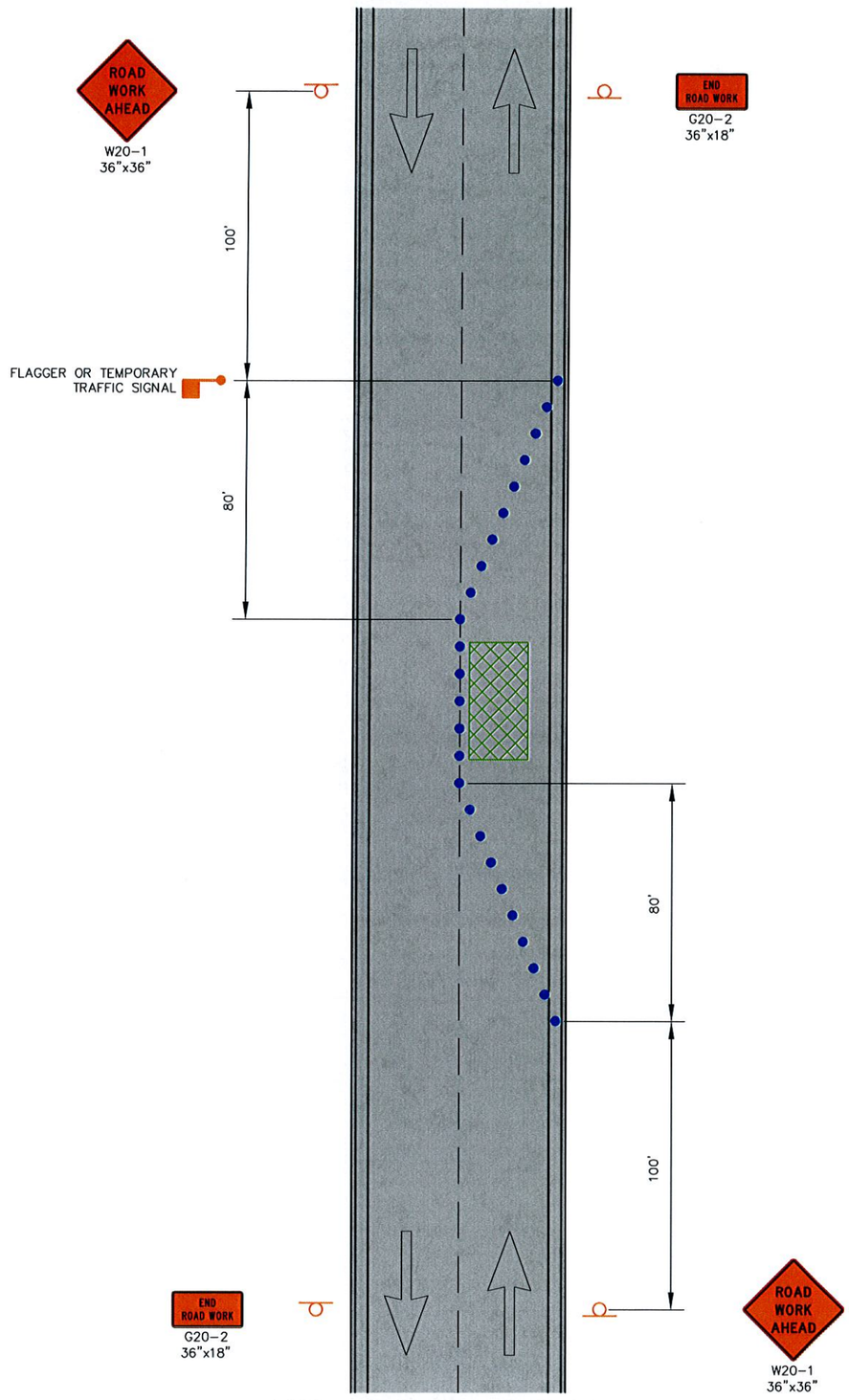

LANE CLOSURE ON A MINOR STREET
NO SCALE

QUANTITY TABLE

ITEM NO.	DESCRIPTION	UNIT	QUANTITY
ITEM NO.	CHANNELIZERS	EA	100
ITEM NO.	"ROAD WORK AHEAD" SIGN (W20-1)	EA	2
ITEM NO.	"END ROAD WORK" SIGN (G20-2)	EA	2

NOTES:

1. TRAFFIC CONTROL SHALL BE MAINTAINED IN ACCORDANCE WITH THE MANUAL ON UNIFORM TRAFFIC CONTROL DEVICES (MUTCD).
2. TEMPORARY PAVEMENT MARKINGS, IF NECESSARY, SHALL BE CONSIDERED AS INCIDENTAL TO THE CONSTRUCTION OF THE PROJECT AND NO DIRECT PAYMENT WILL BE MADE FOR THIS ITEM. PAVEMENT MARKINGS SHALL BE MAINTAINED IN ACCORDANCE WITH PART VI OF THE MUTCD. INTERIM PAVEMENT MARKINGS MAY BE LEFT IN PLACE FOR SITUATIONS OF TWO WEEKS OR LESS.
3. CHANNELIZERS SHALL BE PLACED EVERY 25 FEET UNLESS SHOWN OTHERWISE ON THE PLANS. A MINIMUM 10 FOOT WIDE DRIVING LANE SHALL BE MAINTAINED. CHANNELIZERS SHALL BE PLACED IN OPEN TRENCH DURING NON-WORKING HOURS.
4. IF AN OPEN TRENCH CONDITION WILL REMAIN OPEN OVERNIGHT, "PAVEMENT EDGE TREATMENT" SHALL BE PROVIDED IN ACCORDANCE WITH MODOT STANDARD DRAWING 619.10 AND SHALL BE CONSIDERED INCIDENTAL.
5. ANY EXISTING SIGNS WHICH CONFLICT WITH THE TRAFFIC CONTROL PLAN SHALL BE COVERED.
6. ALL SPACING AND DISTANCES ARE APPROXIMATE AND MAY BE ADJUSTED BY THE ENGINEER TO FIT FIELD CONDITIONS.
7. FOR SHOULDER WORK, USE A FLAGGER WHEN MOVING EQUIPMENT ON AND OFF THE ROADWAY, OTHERWISE OPTIONAL. FOR ANY LANE CLOSURE A FLAGGER IS MANDATORY.
8. PORTABLE STOP SIGNS WILL BE REQUIRED ON ALL APPROACHES DURING TRAFFIC SIGNAL "DOWN TIME".
9. ALL VEHICLES, EQUIPMENT, WORKERS AND THEIR ACTIVITIES SHALL BE RESTRICTED TO ONE SIDE OF THE PAVEMENT.
10. WHEN A LANE IS SHUT DOWN THE CONTRACTOR SHALL PROVIDE FOR TWO WAY TRAFFIC OR ONE LANE TRAFFIC WITH TWO FLAGMEN PRESENT. IN THE EVENT ONE LANE TRAFFIC IS TO REMAIN WHILE THE CONTRACTOR IS NOT ON SITE, TEMPORARY TRAFFIC SIGNALS SHALL BE USED TO CONTROL THE FLOW OF TRAFFIC. PAYMENT FOR THIS WORK SHALL BE CONSIDERED INCIDENTAL TO THE CONTRACT.

LEGEND

- CHANNELIZERS (SAFETY CONES, BARRICADES, AND/OR PLASTIC DRUMS)
- INFORMATIONAL SIGNING
- FLAGGER OR TEMPORARY TRAFFIC SIGNAL
- AREA OF CONSTRUCTION

STATE OF MISSOURI
TARY TODD
NUMBER
E-24182
REGISTERED PROFESSIONAL ENGINEER
2/24/11

12963 Maurer Industrial Dr.
Sunset Hills, MO 63127
314-842-4033 (tel.)
314-842-5957 (fax)
david@cochraneng.com
COCHRAN
• Civil Engineering
• Land Surveying
• Architecture
• Site Development
• General Consulting
• Master Planning
CERTIFICATE OF AUTHORITY NUMBER - 006937

Three working days prior to the start of any excavation on this site, contact Missouri 1-800-DIG-RITE for utility location information.

All OSHA rules & regulations established for the type of construction required by these plans shall be strictly followed (i.e. Trenching, Blasting, etc.)

MILLER STREET PHASE 2 IMPROVEMENTS
FEDERAL PROJECT NO. STP-5401(632)
NEW HAVEN, MISSOURI

DATE:	REVISION:	DWN. BY:	APP'D. BY:

TRAFFIC CONTROL

DWN. BY: M.R.B.
APP'D. BY: T.D.T.
DATE: FEBRUARY 2011
SCALE: NO SCALE
PROJ. NO: SC10-224
DWG. NO: TC-2

Drawing name: J:\SC10-221\TRAFFIC CONTROL_PH 2.dwg Tab: TC-2 Plotted on: Feb 24, 2011 - 8:15am Plotted by: mspalding